FILTERS

FILTRES **FILTROS** FILTER
FILTROS FILTRI ФИЛЬТРЫ فلترات

2014 CATALOGUE
KATALOG CATALOGO
CATÁLOGO **CATALOGUS** КАТАЛОГ

NEW HOLLAND AGRICULTURE

TABLE OF CONTENT

Table des matières
Inhalt
Sommario
Indholdsfortegnelse
Índice general
Índice
Inhoudsopgave
Spis treści
Содержание
جدول المحتويات

1	Machines application guide Guide d'application machines Anwendungstabelle nach Maschine Applicazioni macchine Søgekriterier for Maskiner Guía de aplicación de la máquina Guia de aplicação para as máquinas Toepassingsgids per machine Przewodnik po maszynach применение по модели. دليل تطبيق الماكينة	3
2	Filter drawings Schémas de filtres Filterzeichnungen Disegni dei filtri Filtertegninger Imágenes de filtros Desenhos dos filtros Tekeningen Filters Rysunki filtrów Чертежи фильтров رسومات الفلاتر	29
3	Application guide by part number Guide d'application par référence Anwendungstabelle nach Teilenummer Applicazioni per codice Søgekriterier for part numre Guía de aplicación por referencia Guia de aplicação código de peça Toepassingsgids per onderdeelnummer Przewodnik po numerach części применение по номеру детали دليل التطبيق برقم القطعه	155
4	How to use your filter catalogue Comment utiliser votre catalogue de filtres ? Aufbau des Filterkatalogs Come utilizzare il catalogo filtri? Hvordan anvendes filterkataloget? ¿Cómo usar el catálogo de filtros? Como usar o catálogo de filtros? Hoe uw filtercatalogus te gebruiken? Jak korzystać z katalogu filtrów? Как пользоваться каталогом фильтров? كيفية استخدام كتالوج الفلتر الخاص ب	177

Machines application guide

Guide d'application machines

Anwendungstabelle nach Maschine

Applicazioni macchine

Søgekriterier for Maskiner

Guía de aplicación de la máquina

Guia de aplicação para as máquinas

Toepassingsgids per machine

Przewodnik po maszynach

применение по модели.

دليل تطبيق الماكينة

TC	5
T3000	5
TT	5
TN	5
TNF	5
TNA	6
TNFA	6
TK	6
TKA	7
T4000 NVFS	7
TDD	9
TD4000F	10
TD5000	10
TL	11
TLA	11
T5000	11
T5.XXX	11
TS	12
TSA	14
T6000	15
M/60	19
TM1	19
TM2	20
T6000 RCPC	20
T6.XXX	21
TM	22
TVT	22
T7500	22
T7000	23
T7000SW	23
T7000AC	23
T7.XXXAC	24
T7SWB	24
T7LWB	24
TG	24
T8000	24
T8.XXX	25

TC	26
TC5000	26
CSX	26
CX5/6000	26
CX8000	27
CR	27
FR	28

	Oil		Fuel		Engine Air		Hydraulic		Cabin Air	
TC										
TC21D **TC24D**	**87415600** Engine oil	30-1	**87300039**	30-2			**83912298** Hydraulic pump	30-3		
							SBA340501030 With internal bypass	30-4		
TC21DA	**86546623** Engine oil	31-1	**SBA360720020**	31-2	**SBA314531174** Main	31-3	**SBA340500890** Hydraulic system	31-6		
					SBA314531175 Safety	31-4	**SBA340500930** Hydraulic pump	31-5		
TC24DA	**SBA140517020** Engine oil	32-1	**SBA360720020**	32-2	**SBA314531174** Main	32-3	**SBA340500890** Hydraulic system	32-6		
					SBA314531175 Safety	32-4	**SBA340500930** Hydraulic pump	32-5		
T3000										
T3010	**87289613** Engine	33-3	**87289612**	33-1	**87290073** Main	33-4	**9976807** Hydraulic System	33-6	**9977652** Heater	33-7
			9978059 Separator	33-2	**87290074** Safety	33-5				
T3020 **T3030**	**87289613** Engine	34-3	**87289612**	34-1	**87290073** Main	34-4	**9976807** Hydraulic System	34-8	**9977652** Heater	34-7
			9978059 Separator	34-2	**87290074** Safety	34-5			**9977794** AC Conditioner	34-8
T3040	**87289613** Engine	35-3	**87289612**	35-1	**87290071** Main	35-4	**9976807** Hydraulic System	35-8	**9977652** Heater	35-7
			9978059 Separator	35-2	**87290072** Safety	35-5			**9977794** AC Conditioner	35-8
TT										
TT50	**5096729** Engine oil	36-3	**84214564**	36-2	**86982523** Safety	36-7	**5097103** Lifter Lines	36-4		
			84217953 Fuel Sedimenting Device	36-1	**87704249** Main	36-6				
TT55	**5096729** Engine oil	37-3	**84214564**	37-2	**86982523** Safety	37-7	**1909143** Power Steering	37-5		
			84217953 Fuel Sedimenting Device	37-1	**87704249** Main	37-6	**5097103** Lifter Lines	37-4		
TT65 **TT75**	**5096729** Engine oil	38-3	**84214564**	38-2	**84217229** Main	38-6	**1909143** Power Steering	38-5		
			84217953 Fuel Sedimenting Device	38-1	**87682999** Safety	38-7	**5097103** Lifter Lines	38-4		
TN										
TN55 **TN65**	**84222017** Engine oil	39-2	**84214564**	39-1	**87704249** Main	39-3	**84257511**	39-6		
TN70 **TN75**					**86982523** Safety	39-4	**5194879** Power Shuttle transmission with heat exchanger	39-5		
TNF										
TN70F **TN75F**	**84222017** Engine oil	40-2	**84214564**	40-1	**87704249** Main	40-3	**84257511** Hydraulic pump	40-6	**47137321**	40-7
TN80F					**86982523** Safety	40-4	**5194879** Transmission	40-5	**44911740** Air Filer Carbon	40-7
TN90F **TN95F**	**84222017** Engine oil	41-2	**84214564**	41-1	**1931027** Main	41-3	**84257511** Hydraulic pump	41-6	**47137321**	41-7
					1909117 Safety	41-4	**5194879** Transmission	41-5	**44911740** Air Filer Carbon	41-7

	Oil		Fuel		Engine Air		Hydraulic		Cabin Air	
TNA										
TN60A **TN70A** **TN75A**	**84222017** Engine oil	42-2	**84214564**	42-1	**87704249** Main	42-3	**84257511**	42-6		
					86982523 Safety	42-4	**5194879** Power Shuttle transmission with heat exchanger	42-5		
TN85A **TN95A**	**84228488** Engine oil	43-2	**84565884**	43-1	**87682993** Main	43-3	**84257511**	43-6		
					87682999 Safety	43-4	**5194879** Power Shuttle transmission with heat exchanger	43-5		
TNFA										
TN75FA (VSN included)	**84222017** Engine oil	44-2	**84214564**	44-1	**87704249** Main	44-3	**84257511** Hydraulic pump	44-6	**47129134 x 2** Outer - Standard	44-8
					86982523 Safety	44-4	**5194879** Transmission	44-5	**84572321 x 2** Outer - Anti-pollen	44-8
									47129095 x 2 Outer - Activated Carbon	44-8
									47131906 Inner - Anti-pollen - Short	44-9
									47131908 Inner - Activated Carbon - Short	44-9
									47131907 Inner - Anti-pollen - Long	44-10
									47131909 Inner - Activated Carbon - Long	44-10
									47131888 x 2 Foam	44-7
TN85FA **TN95FA (VSN included)**	**84222017** Engine oil	45-2	**84214564**	45-1	**87342507** Main	45-3	**84257511** Hydraulic pump	45-6	**47129134 x 2** Outer - Standard	45-8
					1930825 Safety	45-4	**5194879** Transmission	45-5	**84572321 x 2** Outer - Anti-pollen	45-8
									47129095 x 2 Outer - Activated Carbon	45-8
									47131906 Inner - Anti-pollen - Short	45-9
									47131908 Inner - Activated Carbon - Short	45-9
									47131907 Inner - Anti-pollen - Long	45-10
									47131909 Inner - Activated Carbon - Long	45-10
									47131888 x 2 Foam	45-7
TK										
TK95M	**84222017** Engine oil	46-1	**84214564**	46-6	**1931027** Main	46-2	**47425202** Hydraulic Pump	46-4		
			84217953 Pre-Cleaner	46-7	**1909117** Safety	46-3	**1909143** Steering direction servocontrol	46-5		
					87342507 Main, with dust ejector	46-2				

	Oil		Fuel		Engine Air		Hydraulic		Cabin Air	
TK (...)										
TK76 **TK76M** **TK85** **TK85M**	**84222017** Engine oil	47-1	**84214564**	47-6	**87704249** Main	47-2	**47425202** Hydraulic Pump	47-4		
			84217953 Pre-Cleaner	47-7	**86982523** Safety	47-3	**1909143** Steering direction servocontrol	47-5		
					87342507 Main, with dust ejector	47-2				
					1909117 Safety, with dust ejector	47-3				
TK65F **TK65V** **TK75F** **TK75M** **TK75V**	**84222017** Engine oil	48-1	**84214564**	48-6	**87704249** Main	48-2	**47425202** Hydraulic Pump	48-4		
					86982523 Safety	48-3	**1909143** Steering direction servocontrol	48-5		
					87780710 Main, with dust ejector	48-2				
					87682967 Safety, with dust ejector	48-3				
TKA										
TK70FA **TK70VA** **TK75FA** **TK75MA** **TK75VA**	**84222017** Engine oil	49-1	**84214564**	49-6	**87704249** Main	49-2	**47425202** Hydraulic Pump	49-4		
					86982523 Safety	49-3	**1909143** Steering direction servocontrol	49-5		
					87780710 Main, with dust ejector	49-2				
					87682967 Safety, with dust ejector	49-3				
TK90A **TK90MA** **TK100A**	**84222017** Engine oil	50-1	**84214564**	50-6	**87342507** Main	50-2	**47425202** Hydraulic Pump	50-4		
			84217953 Pre-Cleaner	50-7	**1930825** Safety	50-3	**1909143** Steering direction servocontrol	50-5		
					87342507 Main, with dust ejector	50-2				
					1909117 Safety, with dust ejector	50-3				
TK80A **TK80MA**	**84222017** Engine oil	51-1	**84214564**	51-6	**87704249** Main	51-2	**47425202** Hydraulic Pump	51-4		
			84217953 Pre-Cleaner	51-7	**86982523** Safety	51-3	**1909143** Steering direction servocontrol	51-5		
					87342507 Main, with dust ejector	51-2				
					1909117 Safety, with dust ejector	51-3				
T4000 NVFS										
T4020 **T4030** Standard	**87679598** Engine oil	52-2	**47367180**	52-1	**87704249** Main	52-3	**84257511** Hydraulic System	52-6		
			84329736 Inline	52-7	**86982523** Safety	52-4	**5194879** Power Shuttle transmission	52-5		

	Oil		Fuel		Engine Air		Hydraulic		Cabin Air	
T4000 NVFS (...)										
T4020 **T4030** Deluxe	**87679598** Engine oil	53-2	**87487344**	53-1	**87704249** Main	53-3	**84257511** Hydraulic System	53-6	**47129134 x 2** Outer - Standard	53-11
					86982523 Safety	53-4	**5194879** Power Shuttle transmission	53-5	**84572321 x 2** Outer - Anti-pollen	53-10
									47129095 x 2 Outer - Activated Carbon	53-10
									47131906 Inner - Anti-pollen - Short	53-8
									47131908 Inner - Activated Carbon - Short	53-8
									47131907 Inner - Anti-pollen - Long	53-9
									47131909 Inner - Activated Carbon - Long	53-9
									47131888 x 2 Foam	53-7
T4030 Deluxe, Japan	**84228488** Engine oil	54-2	**84171722**	54-1	**87037984** Main	54-5	**84257511** Hydraulic System	54-8	**47129134 x 2** Outer - Standard	54-13
			84329736 Inline	54-14	**87037985** Safety	54-6	**5194879** Power Shuttle transmission	54-7	**84572321 x 2** Outer - Anti-pollen	54-12
					87313626 Main - With precleaner for Supersteer front axle	54-3			**47129095 x 2** Outer - Activated Carbon	54-12
					87313629 Safety - With precleaner for Supersteer front axle	54-4			**47131906** Inner - Anti-pollen - Short	54-10
									47131908 Inner - Activated Carbon - Short	54-10
									47131907 Inner - Anti-pollen - Long	54-11
									47131909 Inner - Activated Carbon - Long	54-11
									47131888 x 2 Foam	54-9

	Oil		Fuel		Engine Air		Hydraulic		Cabin Air	
T4000 NVFS (...)										
T4040 **T4050** Deluxe	**84228488** Engine oil	55-2	**84171722**	55-1	**87037984** Main	55-5	**84257511** Hydraulic System	55-8	**47129134 x 2** Outer - Standard	55-13
			84329736 Inline	55-14	**87037985** Safety	55-6	**5194879** Power Shuttle transmission	55-7	**84572321 x 2** Outer - Anti-pollen	55-12
					87313626 Main - With precleaner for Supersteer front axle	55-3			**47129095 x 2** Outer - Activated Carbon	55-12
					87313629 Safety - With precleaner for Supersteer front axle	55-4			**47131906** Inner - Anti-pollen - Short	55-10
									47131908 Inner - Activated Carbon - Short	55-10
									47131907 Inner - Anti-pollen - Long	55-11
									47131909 Inner - Activated Carbon - Long	55-11
									47131888 x 2 Foam	55-9
TDD										
TD60D **TD80D** Before Date 05/09/09	**84222017** Engine	56-4	**84214564**	56-5	**87704249** Main	56-2	**1909143** Power Steering	56-7	**87603874** AC Conditioner & Heater	56-9
	5096729 Engine, TTF Engine Tier 2	56-4	**98439682** TTF Engine Tier 2	56-5	**86982523** Safety	56-3	**47425202** Hydraulic Pump	56-8	**5097838** Heater (Carbon)	56-9
			84217953 Fuel sedimenting Device	56-1	**4987747** With oil bath air cleaner	56-6			**87574476 x 2** Air Louver	56-10
					87682993 Main, with dust ejector	56-2				
					87682999 Safety, with dust ejector	56-3				
TD60D **TD80D** After Date 05/09/09	**84222017** Engine	57-4	**84214564**	57-5	**87704249** Main	57-2	**1909143** Power Steering	57-7	**87603874** AC Conditioner & Heater	57-9
	5096729 Engine, TTF Engine Tier 2	57-4	**98439682** TTF Engine Tier 2	57-5	**86982523** Safety	57-3	**84257511** Hydraulic Pump	57-8	**5097838** Heater (Carbon)	57-9
			84217953 Fuel sedimenting Device	57-1	**4987747** With oil bath air cleaner	57-6			**87574476 x 2** Air Louver	57-10
					87682993 Main, with dust ejector	57-2				
					87682999 Safety, with dust ejector	57-3				
TD70D **TD90D** **TD95D** Before Date 05/09/09	**84222017** Engine	58-4	**84214564**	58-5	**84217229** Main	58-2	**1909143** Power Steering	58-7	**87603874** AC Conditioner & Heater	58-9
	5096729 Engine, TTF Engine Tier 2	58-4	**98439682** TTF Engine Tier 2	58-5	**87682999** Safety	58-3	**47425202** Hydraulic Pump	58-8	**5097838** Heater (Carbon)	58-9
			84217953 Fuel sedimenting Device	58-1	**4987747** With oil bath air cleaner	58-6			**87574476 x 2** Air Louver	58-10
					87682993 Main, with dust ejector	58-2				

	Oil		Fuel		Engine Air		Hydraulic		Cabin Air	
TDD (...)										
TD70D **TD90D** **TD95D** After Date 05/09/09	**84222017** Engine	59-4	**84214564**	59-5	**84217229** Main	59-2	**1909143** Power Steering	59-7	**87603874** AC Conditioner & Heater	59-9
	5096729 Engine, TTF Engine Tier 2	59-4	**98439682** TTF Engine Tier 2	59-5	**87682999** Safety	59-3	**84257511** Hydraulic Pump	59-8	**5097838** Heater (Carbon)	59-9
			84217953 Fuel sedimenting Device	59-1	**4987747** With oil bath air cleaner	59-6			**87574476 x 2** Air Louver	59-10
					87682993 Main, with dust ejector	59-2				
TD4000F										
T4030F **T4040F** With CAB	**87679598** Engine oil	60-2	**84477495**	60-1	**87037984** Main	60-3	**5194879** Gearbox lube line	60-5	**84572321 x 2** Air	60-7
					87037985 Safety	60-4	**84257511** Hydraulic Pump	60-6	**47129134 x 2** Air conditioning	60-8
									47131906 Inner - Anti-pollen - Short	60-9
T4030F **T4040F** Without CAB	**87679598** Engine oil	61-2	**84477495**	61-1	**87037984** Main	61-3	**5194879** Gearbox lube line	61-5		
					87037985 Safety	61-4	**84257511** Hydraulic Pump	61-6		
T4050F **T4060F** With CAB	**84475545** Engine oil	62-2	**84565884**	62-1	**87037984** Main	62-3	**5194879** Gearbox lube line	62-5	**84572321 x 2** Air	62-7
					87037985 Safety	62-4	**84257511** Hydraulic Pump	62-6	**47129134 x 2** Air conditioning	62-8
									47131906 Inner - Anti-pollen - Short	62-9
T4050F **T4060F** Without CAB	**84475545** Engine oil	63-2	**84565884**	63-1	**87037984** Main	63-3	**5194879** Gearbox lube line	63-5		
					87037985 Safety	63-4	**84257511** Hydraulic Pump	63-6		
TD5000										
TD5010 **TD5020** **TD5030**	**87679598** Engine	64-6	**47367180**	64-5	**84217229** Main	64-3	**5194879** Steering	64-1	**87574476 x 2** Air Louver	64-8
			87329736 Inline	64-9	**87682999** Safety	64-4	**84257511** Transmission	64-2	**87603874** A/C, Heater	64-7
									5097838 Heater, Activated Carbon	64-7
TD5040 **TD5050**	**84228488** Engine	65-6	**84565884**	65-5	**84217229** Main	65-3	**5194879** Steering	65-1	**87574476 x 2** Air Louver	65-8
			87329736 Inline	65-9	**87682999** Safety	65-4	**84257511** Transmission	65-2	**87603874** A/C, Heater	65-7
									5097838 Heater, Activated Carbon	65-7
TD5030 **TD5040** Japan Market	**87679598** Engine	66-6	**84477495**	66-5	**84217229** Main	66-3	**5194879** Steering	66-1	**87574476 x 2** Air Louver	66-8
					87682999 Safety	66-4	**84257511** Transmission	66-2	**87603874** A/C, Heater	66-7
									5097838 Heater, Activated Carbon	66-7

	Oil		Fuel		Engine Air		Hydraulic		Cabin Air	
TL										
TL70 **TL80**	**84221215** Engine oil	67-3	**84214564**	67-1	**87704249** Main	67-4	**1909143** Steering direction servocontrol - 2WD	67-7	**82033107 x 2** Foam	67-10
			84217953 Pre-Cleaner	67-2	**86982523** Safety	67-5	**84399618** Steering direction servocontrol - 2WD & 4WD	67-8	**5196842 x 2** Main	67-9
					87780710 Main, with dust ejector	67-4	**5194879** Power shuttle transmission, with Hi-Lo	67-6		
					87682967 Safety, with dust ejector	67-5				
TL90 **TL100**	**84221215** Engine oil	68-3	**84214564**	68-1	**87682993** Main	68-4	**1909143** Steering direction servocontrol - 2WD	68-7	**82033107 x 2** Foam	68-10
			84217953 Pre-Cleaner	68-2	**87682999** Safety	68-5	**84399618** Steering direction servocontrol - 2WD & 4WD	68-8	**5196842 x 2** Main	68-9
					1930605 Main, with dust ejector	68-4	**5194879** Power shuttle transmission, with Hi-Lo	68-6		
					1930825 Safety, with dust ejector	68-5				
TLA										
TL70A **TL80A** **TL90A** **TL100A** Before Engine Serial Number 400031	**84228488** Engine oil	69-2	**84565884**	69-1	**87682993** Main	69-3	**84257511** Hydraulic system	69-6	**82033107 x 2** Foam	69-7
					87682999 Safety	69-4	**5194879** Power shuttle transmission	69-5	**5196842 x 2** Main	69-8
					84217229 Main, with dust ejector	69-3				
TL70A **TL80A** **TL90A** **TL100A** After Engine Serial Number 400032	**84228488** Engine oil	70-2	**2854796**	70-1	**87682993** Main	70-3	**84257511** Hydraulic system	70-6	**82033107 x 2** Foam	70-7
					87682999 Safety	70-4	**5194879** Power shuttle transmission	70-5	**5196842 x 2** Main	70-8
					84217229 Main, with dust ejector	70-3				
T5000										
T5030 **T5040** **T5050** **T5060** **T5070**	**84228488** Engine Oil Filter	71-1	**84565884** W/Water Separator	71-3	**87037984** Main	71-5	**84257511** Pump	71-6	**5196842 x 2** Air Intake	71-8
			87329736 Inline	71-2	**87037985** Safety	71-4	**5194879** Transmission	71-7	**82033107 x 2** Air Intake - Primary	71-9
T5.XXX										
T5.95 **T5.105** **T5.115**	**87679598** Engine Oil Filter	72-1	**5801585394** Primary	72-2	**84479228** Main	72-4	**84248043** Hydraulic Pump 61 l/min	72-6	**84577445 x 2** Climate Control; Cab mounted	72-8
			47450038 Secondary	72-3	**84479225** Safety	72-5	**84581942** Hydraulic Pump 80 l/min	72-6	**84579424 x 2** Climate Control; Fender mounted	72-9
			84328598 Pre-Cleaner	72-11			**84564510** Hydrostatic Steering; Delivery Pipe	72-7		
							5194879 Hydrostatic Steering; Return Pipe	72-10		

	Oil		Fuel		Engine Air		Hydraulic		Cabin Air	
TS										
TS90 Before Engine Serial Number 139306	**81879134** Engine	73-9	**87801285** Injection	73-15	**82027153** Main	73-1	**84248043** Hydraulic Pump	73-10	**82018373 x 2** AC Conditioner	73-8
			83916922 Separator Fuel/Water	73-16	**82008601** Safety	73-2	**81869132** Hydraulic Pump CCLS (Power Steering)	73-12	**47548101 x 2** Heater, Primary	73-6
					84465005 Oil bath	73-3	**84226258** Hydraulic Pump CCLS (Charge Pump)	73-11	**82033107 x 2** Heater, Secondary	73-7
					82926173 Oil bath - Pre-Cleaner	73-5	**84248043** Hydraulic Pump CCLS (Lift Intake)	73-10		
					85804347 Pre-Cleaner	73-4	**82003166** Transmission 24x24 Filter	73-13		
							81869132 Auxliary Pump, 98x 208	73-12		
							F0NNB486AA Auxliary Pump, 3.86 x 6.57	73-14		
TS100 **TS110** Before Engine Serial Number 139306	**81879134** Engine	74-7	**87801285** Injection	74-13	**82027153** Main	74-1	**84248043** Hydraulic Pump	74-8	**82018373 x 2** AC Conditioner	74-6
			83916922 Separator Fuel/Water	74-14	**82008601** Safety	74-2	**81869132** Hydraulic Pump CCLS (Power Steering)	74-10	**47548101 x 2** Heater, Primary	74-4
					85804347 Pre-Cleaner	74-3	**84226258** Hydraulic Pump CCLS (Charge Pump)	74-9	**82033107 x 2** Heater, Secondary	74-5
							84248043 Hydraulic Pump CCLS(Lift Intake)	74-8		
							82003166 Transmission 24x24 Filter	74-11		
							81869132 Auxliary Pump, 98x 208	74-10		
							F0NNB486AA Auxliary Pump, 3.86 x 6.57	74-12		
TS115 Before Engine Serial Number 139306	**84518337** Engine	75-7	**87801285** Injection	75-12	**82027153** Main	75-1	**84248043** Hydraulic Pump	75-8	**82018373 x 2** AC Conditioner	75-6
			83916922 Separator Fuel/Water	75-13	**82008601** Safety	75-2	**81869132** Hydraulic Pump CCLS (Power Steering)	75-10	**47548101 x 2** Heater, Primary	75-4
					85804347 Pre-Cleaner	75-3	**84226258** Hydraulic Pump CCLS (Charge Pump)	75-9	**82033107 x 2** Heater, Secondary	75-5
							84248043 Hydraulic Pump CCLS(Lift Intake)	75-8		
							82003166 Transmission 24x24 Filter	75-11		
							81869132 Auxliary Pump	75-10		

	Oil		Fuel		Engine Air		Hydraulic		Cabin Air	
TS (...)										
TS90 After Engine Serial Number 139307	**81879134** Engine	76-9	**87801285** Injection	76-15	**82027153** Main	76-1	**84248043** Hydraulic Pump	76-10	**82018373 x 2** AC Conditioner	76-8
			83916922 Separator Fuel/Water	76-16	**82008601** Safety	76-2	**81869132** Hydraulic Pump CCLS (Power Steering)	76-12	**82014824 x 2** Heater, Primary	76-6
					84465005 Oil bath	76-3	**84226258** Hydraulic Pump CCLS (Charge Pump)	76-11	**82033107 x 2** Heater, Secondary	76-7
					82926173 Oil bath - Pre-Cleaner	76-5	**84248043** Hydraulic Pump CCLS(Lift Intake)	76-10		
					85804347 Pre-Cleaner	76-4	**82003166** Transmission 24x24 Filter	76-13		
							81869132 Auxliary Pump, 98x 208	76-12		
							F0NNB486AA Auxliary Pump, 3.86 x 6.57	76-14		
TS100 **TS110** After Engine Serial Number 139307	**81879134** Engine	77-7	**87801285** Injection	77-13	**82027153** Main	77-1	**84248043** Hydraulic Pump	77-8	**82018373 x 2** AC Conditioner	77-6
			83916922 Separator Fuel/Water	77-14	**82008601** Safety	77-2	**81869132** Hydraulic Pump CCLS (Power Steering)	77-10	**82014824 x 2** Heater, Primary	77-4
					85804347 Pre-Cleaner	77-3	**84226258** Hydraulic Pump CCLS (Charge Pump)	77-9	**82033107 x 2** Heater, Secondary	77-5
							84248043 Hydraulic Pump CCLS(Lift Intake)	77-8		
							82003166 Transmission 24x24 Filter	77-11		
							81869132 Auxliary Pump, 98x 208	77-10		
							F0NNB486AA Auxliary Pump, 3.86 x 6.57	77-12		
TS115 After Engine Serial Number 139307	**84518337** Engine	78-7	**87801285** Injection	78-12	**82027153** Main	78-1	**84248043** Hydraulic Pump	78-8	**82018373 x 2** AC Conditioner	78-6
			83916922 Separator Fuel/Water	78-13	**82008601** Safety	78-2	**81869132** Hydraulic Pump CCLS (Power Steering)	78-10	**82014824 x 2** Heater, Primary	78-4
					85804347 Pre-Cleaner	78-3	**84226258** Hydraulic Pump CCLS (Charge Pump)	78-9	**82033107 x 2** Heater, Secondary	78-5
							84248043 Hydraulic Pump CCLS(Lift Intake)	78-8		
							82003166 Transmission 24x24 Filter	78-11		
							81869132 Auxliary Pump	78-10		

	Oil		Fuel		Engine Air		Hydraulic		Cabin Air	
TSA										
TS100A **TS115A**	**84228488** Engine oil	79-2	**84565884**	79-1	**84493217** Main	79-3	**84226258** Gearbox control system	79-5	**87309516 x 2** Air conditioning, with High Profile Roof (Carbon)	79-9
					87682992 Safety	79-4	**84248043** Hydraulic system	79-6	**87726695 x 2** Air conditioning, with Low Profile Roof	79-11
					87704244 Main, with Pre-Cleaner	79-3	**84226263** Hydraulic pump	79-7	**87726675 x 2** Air conditioning, with High Profile Roof	79-9
					87682992 Safety, with Pre-Cleaner	79-4	**84226260** Hydraulic system, with 16x16 or 24x24 transmission	79-8	**87726699** Recirculation	79-10
TS110A **TS125A**	**84228488** Engine oil	80-3	**84170818** Primary	80-1	**84493217** Main	80-4	**84226258** Gearbox control system	80-6	**87309516 x 2** Air conditioning, with High Profile Roof (Carbon)	80-10
			84412164 Secondary	80-2	**87682992** Safety	80-5	**84248043** Hydraulic system	80-7	**87726695 x 2** Air conditioning, with Low Profile Roof	80-12
					87704244 Main, with Pre-Cleaner	80-4	**84226263** Hydraulic pump	80-8	**87726675 x 2** Air conditioning, with High Profile Roof	80-10
					87682992 Safety, with Pre-Cleaner	80-5	**84226260** Hydraulic system, with 16x16 or 24x24 transmission	80-9	**87726699** Recirculation	80-11
TS135A	**84228488** Engine oil	81-3	**84170818** Primary	81-1	**87704248** Main	81-4	**84226260** Hydraulic system	81-6	**87309516 x 2** Air conditioning, with High Profile Roof (Carbon)	81-8
			84412164 Secondary	81-2	**87683000** Safety	81-5	**84226263** Hydraulic pump	81-7	**87726695 x 2** Air conditioning, with Low Profile Roof	81-10
					87682990 Main, with Pre-Cleaner	81-4			**87726675 x 2** Air conditioning, with High Profile Roof	81-8
					87683000 Safety, with Pre-Cleaner	81-5			**87726699** Recirculation	81-9
TS100A **TS110A** Standard	**84228488** Engine oil	82-2	**84565884**	82-1	**84493217** Main	82-3	**84226258** Gearbox control system	82-5	**87726695** Air conditioning, with Low Profile Roof	82-9
					87682992 Safety	82-4	**84248043** Hydraulic system	82-7	**87726675** Air conditioning, with High Profile Roof	82-8
					87704244 Main, with Pre-Cleaner	82-3	**84226258** Hydraulic system, with 16x16 transmission	82-6	**87726699** Recirculation	82-10
					87682992 Safety, with Pre-Cleaner	82-4				
TS115A **TS130A** Standard	**84228488** Engine oil	83-2	**84565884**	83-1	**87704248** Main	83-3	**84226258** Gearbox control system	83-5	**87726695** Air conditioning, with Low Profile Roof	83-9
					87683000 Safety	83-4	**84248043** Hydraulic system	83-7	**87726675** Air conditioning, with High Profile Roof	83-8
					87682990 Main, with Pre-Cleaner	83-3	**84226258** Hydraulic system, with 16x16 transmission	83-6	**87726699** Recirculation	83-10
					87683000 Safety, with Pre-Cleaner	83-4				

	Oil		Fuel		Engine Air		Hydraulic		Cabin Air	
T6000										
T6010 **T6020** Delta Version Before Serial Number 710158	**84228488** Engine	84-5	**84565884**	84-7	**84493217** Main	84-3	**84248043** Hydraulic System (63 l/min pump) with 16x16 transmission	84-9	**87726695 x 2** Heater & AC Conditioner	84-1
			84328598 Pre-Cleaner	84-6	**87682992** Safety	84-4	**84226258** Hydraulic System (63 l/min pump) with 12x12 or 24x24 transmission	84-8	**87726699** Heater & AC Conditioner (Recirculation)	84-2
					87704244 Main, with Pre-Cleaner	84-3				
						84-4				
T6010 **T6020** Delta Version After Serial Number 710159	**84228488** Engine	85-5	**84526251**	85-7	**84493217** Main	85-3	**84248043** Hydraulic System (63 l/min pump) with 16x16 transmission	85-9	**87726695 x 2** Heater & AC Conditioner	85-1
			84328598 Pre-Cleaner	85-6	**87682992** Safety	85-4	**84226258** Hydraulic System (63 l/min pump) with 12x12 or 24x24 transmission	85-8	**87726699** Heater & AC Conditioner (Recirculation)	85-2
					87704244 Main, with Pre-Cleaner	85-3				
T6030 **T6050** Delta Version Before Serial Number 710158	**84228488** Engine	86-5	**84565884**	86-7	**87704248** Main	86-3	**84248043** Hydraulic System (63 l/min pump) with 16x16 transmission	86-9	**87726695 x 2** Heater & AC Conditioner	86-1
			84328598 Pre-Cleaner	86-6	**87683000** Safety	86-4	**84226258** Hydraulic System (63 l/min pump) with 12x12 or 24x24 transmission	86-8	**87726699** Heater & AC Conditioner (Recirculation)	86-2
					87682990 Main, with Pre-Cleaner	86-3				
T6030 **T6050** Delta Version After Serial Number 710159	**84228488** Engine	87-5	**84526251**	87-7	**87704248** Main	87-3	**84248043** Hydraulic System (63 l/min pump) with 16x16 transmission	87-9	**87726695 x 2** Heater & AC Conditioner	87-1
			84328598 Pre-Cleaner	87-6	**87683000** Safety	87-4	**84226258** Hydraulic System (63 l/min pump) with 12x12 or 24x24 transmission	87-8	**87726699** Heater & AC Conditioner (Recirculation)	87-2
					87682990 Main, with Pre-Cleaner	87-3				
T6010 **T6020** Plus Version Before Serial Number 710158	**84228488** Engine	88-5	**84565884**	88-7	**84493217** Main	88-3	**84248043** Hydraulic System (80 l/min pump) with SPS transmission	88-11	**87726675 x 2** Heater & AC Conditioner	88-1
			84328598 Pre-Cleaner	88-6	**87682992** Safety	88-4	**84226260** Hydraulic System (113 l/min pump)	88-10	**87726699** Heater & AC Conditioner (Recirculation)	88-2
					87704244 Main, with Pre-Cleaner	88-3	**84226263** Hydraulic Pump 113 l/min	88-9		
							84226258 Hydraulic System (80 l/min pump) with 24x24 transmission	88-8		

	Oil		Fuel		Engine Air		Hydraulic		Cabin Air	
T6000 (...)										
T6010 **T6020** Plus Version After Serial Number 710159	**84228488** Engine	89-5	**84526251**	89-7	**84493217** Main	89-3	**84248043** Hydraulic System (80 l/min pump) with SPS transmission	89-11	**87726675 x 2** Heater & AC Conditioner	89-1
			84328598 Pre-Cleaner	89-6	**87682992** Safety	89-4	**84226260** Hydraulic System (113 l/min pump)	89-10	**87726699** Heater & AC Conditioner (Recirculation)	89-2
					87704244 Main, with Pre-Cleaner	89-3	**84226263** Hydraulic Pump 113 l/min	89-9		
							84226258 Hydraulic System (80 l/min pump) with 24x24 transmission	89-8		
T6030 **T6050** **T6070** Plus Version Before Serial Number 710158	**84228488** Engine	90-5	**84565884**	90-7	**87704248** Main	90-3	**84248043** Hydraulic System (80 l/min pump) with SPS transmission	90-11	**87726675 x 2** Heater & AC Conditioner	90-1
			84328598 Pre-Cleaner	90-6	**87683000** Safety	90-4	**84226260** Hydraulic System (113 l/min pump)	90-10	**87726699** Heater & AC Conditioner (Recirculation)	90-2
					87682990 Main, with Pre-Cleaner	90-3	**84226263** Hydraulic Pump 113 l/min	90-9		
							84226258 Hydraulic System (80 l/min pump) with 24x24 transmission	90-8		
T6030 **T6050** **T6070** Plus Version After Serial Number 710159	**84228488** Engine	91-5	**84526251**	91-7	**87704248** Main	91-3	**84248043** Hydraulic System (80 l/min pump) with SPS transmission	91-11	**87726675 x 2** Heater & AC Conditioner	91-1
			84328598 Pre-Cleaner	91-6	**87683000** Safety	91-4	**84226260** Hydraulic System (113 l/min pump)	91-10	**87726699** Heater & AC Conditioner (Recirculation)	91-2
					87682990 Main, with Pre-Cleaner	91-3	**84226263** Hydraulic Pump 113 l/min	91-9		
							84226258 Hydraulic System (80 l/min pump) with 24x24 transmission	91-8		
T6050 Plus Version Before Serial Number 710158 Without Cab	**84228488** Engine	92-5	**84565884**	92-7	**87704248** Main	92-3	**84248043** Hydraulic System (80 l/min pump)	92-10	**87726675 x 2** Heater & AC Conditioner	92-1
			84328598 Pre-Cleaner	92-6	**87683000** Safety	92-4	**84226260** Hydraulic System (113 l/min pump)	92-9	**87726699** Heater & AC Conditioner (Recirculation)	92-2
					87682990 Main, with Pre-Cleaner	92-3	**84226258** Hydraulic Pump 113 l/min	92-8		
T6050 Plus Version After Serial Number 710159 Without Cab	**84228488** Engine	93-5	**84526251**	93-7	**87704248** Main	93-3	**84248043** Hydraulic System (80 l/min pump)	93-10	**87726675 x 2** Heater & AC Conditioner	93-1
			84328598 Pre-Cleaner	93-6	**87683000** Safety	93-4	**84226260** Hydraulic System (113 l/min pump)	93-9	**87726699** Heater & AC Conditioner (Recirculation)	93-2
					87682990 Main, with Pre-Cleaner	93-3	**84226258** Hydraulic Pump 113 l/min	93-8		

	Oil		Fuel		Engine Air		Hydraulic		Cabin Air	
T6000 (...)										
T6050 Plus Version After 1/12/2009 Without Cab	**84228488** Engine	94-5	**84526251**	94-7	**87704248** Main	94-3	**84248043** Hydraulic System (80 l/min pump)	94-10	**87726675 x 2** Heater & AC Conditioner	94-1
			84328598 Pre-Cleaner	94-6	**87683000** Safety	94-4	**87708150** Hydraulic System (113 l/min pump)	94-9	**87726699** Heater & AC Conditioner (Recirculation)	94-2
					87682990 Main, with Pre-Cleaner	94-3	**84226263** Hydraulic Pump 113 l/min	94-8		
T6010 **T6020** Plus Version Before 1/12/2009 With Cab	**84228488** Engine	95-5	**84526251**	95-7	**84493217** Main	95-3	**84248043** Hydraulic System (80 l/min pump) with SPS transmission	95-11	**87726675 x 2** Heater & AC Conditioner	95-1
			84328598 Pre-Cleaner	95-6	**87682992** Safety	95-4	**84226260** Hydraulic System (113 l/min pump)	95-10	**87726699** Heater & AC Conditioner (Recirculation)	95-2
					87704244 Main, with Pre-Cleaner	95-3	**84226263** Hydraulic Pump 113 l/min	95-9		
							84226258 Hydraulic System (80 l/min pump) with 24x24 transmission	95-8		
T6010 **T6020** Plus Version After 1/12/2009 With Cab	**84228488** Engine	96-5	**84526251**	96-7	**84493217** Main	96-3	**84248043** Hydraulic System (80 l/min pump) with SPS transmission	96-10	**87726675 x 2** Heater & AC Conditioner	96-1
			84328598 Pre-Cleaner	96-6	**87682992** Safety	96-4	**87708150** Hydraulic System (113 l/min pump)	96-9	**87726699** Heater & AC Conditioner (Recirculation)	96-2
					87704244 Main, with Pre-Cleaner	96-3	**84226258** Hydraulic Pump 113 l/min	96-8		
T6030 **T6050** **T6070** Plus Version Before 1/12/2009 With Cab	**84228488** Engine	97-5	**84526251**	97-7	**87704248** Main	97-3	**84248043** Hydraulic System (80 l/min pump) with SPS transmission	97-11	**87726675 x 2** Heater & AC Conditioner	97-1
			84328598 Pre-Cleaner	97-6	**87683000** Safety	97-4	**84226260** Hydraulic System (113 l/min pump)	97-10	**87726699** Heater & AC Conditioner (Recirculation)	97-2
					87682990 Main, with Pre-Cleaner	97-3	**84226263** Hydraulic Pump 113 l/min	97-9		
							84226258 Hydraulic System (80 l/min pump) with 24x24 transmission	97-8		
T6030 **T6050** **T6070** Plus Version After 1/12/2009 With Cab	**84228488** Engine	98-5	**84526251**	98-7	**87704248** Main	98-3	**84248043** Hydraulic System (80 l/min pump) with SPS transmission	98-10	**87726675 x 2** Heater & AC Conditioner	98-1
			84328598 Pre-Cleaner	98-6	**87683000** Safety	98-4	**87708150** Hydraulic System (113 l/min pump)	98-9	**87726699** Heater & AC Conditioner (Recirculation)	98-2
					87682990 Main, with Pre-Cleaner	98-3	**84226258** Hydraulic Pump 113 l/min	98-8		

	Oil		Fuel		Engine Air		Hydraulic		Cabin Air	
T6000 (...)										
T6020 **T6040** **T6060** Elite Version Before Serial Number 710158	**84228488** Engine	99-5	**84170818** Primary	99-7	**84493217** Main	99-3	**84226260** Hydraulic System (113 l/min pump)	99-11	**87726675 x 2** Heater & AC Conditioner	99-1
			84412164 Secondary	99-8	**87682992** Safety	99-4	**84226263** Hydraulic Pump 113 l/min with CL. 4 front axle	99-10	**87726699** Heater & AC Conditioner (Recirculation)	99-2
			84328598 Pre-Cleaner	99-6	**87704244** Main, with Pre-Cleaner	99-3	**84226258** Hydraulic Pump 113 l/min with CL. 3 front axle	99-9		
T6020 **T6040** **T6060** Elite Version After Serial Number 710159	**84228488** Engine	100-5	**84278636** Primary	100-7	**84493217** Main	100-3	**84226260** Hydraulic System (113 l/min pump)	100-11	**87726675 x 2** Heater & AC Conditioner	100-1
			84412164 Secondary	100-8	**87682992** Safety	100-4	**84226263** Hydraulic Pump 113 l/min with CL. 4 front axle	100-10	**87726699** Heater & AC Conditioner (Recirculation)	100-2
			84328598 Pre-Cleaner	100-6	**87704244** Main, with Pre-Cleaner	100-3	**84226258** Hydraulic Pump 113 l/min with CL. 3 front axle	100-9		
T6020 **T6040** **T6060** Elite Version After 1/12/2009	**84228488** Engine	101-6	**84278636** Primary	101-9	**84493217** Main	101-4	**87708150** Hydraulic System (113 l/min pump)	101-13	**87726675 x 2** Heater & AC Conditioner	101-2
			84412164 Secondary	101-10	**87682992** Safety	101-5	**84226258** Hydraulic Pump 113 l/min with CL. 4 front axle	101-11	**87726699** Heater & AC Conditioner (Recirculation)	101-3
			84328598 Pre-Cleaner	101-7	**87704244** Main, with Pre-Cleaner	101-4	**84226263** Hydraulic Pump 113 l/min with CL. 3 front axle	101-12		
T6030 **T6050** **T6070** Elite Version Before Serial Number 710158	**84228488** Engine	102-5	**84170818** Primary	102-7	**87704248** Main	102-3	**84226260** Hydraulic System (113 l/min pump)	102-11	**87726675 x 2** Heater & AC Conditioner	102-1
			84412164 Secondary	102-8	**87683000** Safety	102-4	**84226263** Hydraulic Pump 113 l/min with CL. 4 front axle	102-10	**87726699** Heater & AC Conditioner (Recirculation)	102-2
			84328598 Pre-Cleaner	102-6	**87682990** Main, with Pre-Cleaner	102-3	**84226258** Hydraulic Pump 113 l/min with CL. 3 front axle	102-9		
T6030 **T6050** **T6070** Elite Version After Serial Number 710159	**84228488** Engine	103-5	**84278636** Primary	103-7	**87704248** Main	103-3	**84226260** Hydraulic System (113 l/min pump)	103-11	**87726675 x 2** Heater & AC Conditioner	103-1
			84412164 Secondary	103-8	**87683000** Safety	103-4	**84226263** Hydraulic Pump 113 l/min with CL. 4 front axle	103-10	**87726699** Heater & AC Conditioner (Recirculation)	103-2
			84328598 Pre-Cleaner	103-6	**87682990** Main, with Pre-Cleaner	103-3	**84226258** Hydraulic Pump 113 l/min with CL. 3 front axle	103-9		

	Oil		Fuel		Engine Air		Hydraulic		Cabin Air	
T6000 (...)										
T6030 **T6050** **T6070** Elite Version After 1/12/2009	**84228488** Engine	104-5	**84278636** Primary	104-7	**87704248** Main	104-3	**87708150** Hydraulic System (113 l/min pump)	104-11	**87726675 x 2** Heater & AC Conditioner	104-1
			84412164 Secondary	104-8	**87683000** Safety	104-4	**84226258** Hydraulic Pump 113 l/min with CL. 4 front axle	104-9	**87726699** Heater & AC Conditioner (Recirculation)	104-2
			84328598 Pre-Cleaner	104-6	**87682990** Main, with Pre-Cleaner	104-3	**84226263** Hydraulic Pump 113 l/min with CL. 3 front axle	104-10		
M/60										
8160 **8260**	**81879134** Engine oil	105-4	**87840591** Fuel/Water Separator	105-9	**82008600** Main	105-7	**84248043** Hydraulic Pump, Primary	105-5	**82012057 x 2** Heating	105-2
			87802332 Fuel/Water Separator	105-9	**82008601** Safety	105-8	**84226258** Hydraulic Pump, Secondary	105-6	**82033107 x 2** Foam	105-3
			87840590	105-10	**87394887** Main, with Pre-Cleaner	105-7	**47365582** Hydraulic System	105-1	**5196842 x 2** Air conditioning	105-2
					82014794 Safety, with Pre-Cleaner	105-8				
8360 **8560**	**81879134** Engine oil	106-4	**87840591** Fuel/Water Separator	106-9	**82008606** Main	106-7	**84248043** Hydraulic Pump, Primary	106-5	**82012057 x 2** Heating	106-2
			87802332 Fuel/Water Separator	106-9	**82008607** Safety	106-8	**84226258** Hydraulic Pump, Secondary	106-6	**82033107 x 2** Foam	106-3
			87840590	106-10	**87394887** Main, with Pre-Cleaner	106-7	**47365582** Hydraulic System	106-1	**5196842 x 2** Air conditioning	106-2
M100 **M115**	**81879134** Engine oil	107-4	**87840591** Fuel/Water Separator	107-9	**82008600** Main	107-7	**84248043** Hydraulic Pump, Primary	107-5	**82012057 x 2** Heating	107-2
			87802332 Fuel/Water Separator	107-9	**82008601** Safety	107-8	**84226258** Hydraulic Pump, Secondary	107-6	**82033107 x 2** Foam	107-3
			87840590	107-10	**87394887** Main, with Pre-Cleaner	107-7	**47365582** Hydraulic System	107-1	**5196842 x 2** Air conditioning	107-2
					82014794 Safety, with Pre-Cleaner	107-8				
M135 **M160**	**81879134** Engine oil	108-4	**87840591** Fuel/Water Separator	108-9	**82008606** Air Cleaner, Main	108-7	**84248043** Hydraulic Pump, Primary	108-5	**82012057 x 2** Heating	108-2
			87802332 Fuel/Water Separator	108-9	**82008607** Safety	108-8	**84226258** Hydraulic Pump, Secondary	108-6	**82033107 x 2** Foam	108-3
			87840590	108-10	**87394887** Main, with Pre-Cleaner	108-7	**47365582** Hydraulic System	108-1	**5196842 x 2** Air conditioning	108-2
TM1										
TM115	**81879134** Engine oil	109-3	**87840590**	109-1	**47372276** Main	109-4	**84248043** Hydraulic pump - Primary	109-6	**82018373 x 2** Roof	109-9
			87802332 Water separator	109-2	**82008601** Safety	109-5	**84226258** Hydraulic pump - Secondary	109-7	**87385322 x 2** Air conditioning	109-10
					87394887 Main, with Pre-Cleaner	109-4	**47365582** Hydraulic pump, with 20x16 transmission	109-8	**82033107 x 2** Foam	109-11
					82014794 Safety, with Pre-Cleaner	109-5				

	Oil		Fuel		Engine Air		Hydraulic		Cabin Air	
TM1 (...)										
TM125	**81879134** Engine oil	110-3	**87840590**	110-1	**87394880** Main	110-4	**84248043** Hydraulic pump - Primary	110-6	**82018373 x 2** Roof	110-9
			87802332 Water separator	110-2	**82034441** Safety	110-5	**84226258** Hydraulic pump - Secondary	110-7	**87385322 x 2** Air conditioning	110-10
					87394887 Main, with Pre-Cleaner	110-4	**47365582** Hydraulic pump, with 20x16 transmission	110-8	**82033107 x 2** Foam	110-11
TM135 **TM150** **TM165**	**81879134** Engine oil	111-3	**87840590**	111-1	**87394880** Main	111-4	**84248043** Hydraulic pump - Primary	111-6	**82018373 x 2** Roof	111-8
			87802332 Water separator	111-2	**82034441** Safety	111-5	**84226258** Hydraulic pump - Secondary	111-7	**87385322 x 2** Air conditioning	111-9
					87394887 Main, with Pre-Cleaner	111-4			**82033107 x 2** Foam	111-10
TM2										
TM120 **TM130** **TM140** **TM155** Before Serial Number ACM218235	**81879134** Engine oil	112-4	**87802728** Fuel system with one filter	112-1	**87394880** Main	112-5	**84248043** Hydraulic pump	112-7	**82018373 x 2** Roof	112-9
			87840590 Primary, for fuel system with two filters	112-2	**82034441** Safety	112-6	**47365582** Hydraulic pump, with 20x16 transmission	112-8	**87385322 x 2** Air conditioning	112-10
			87802332 Secondary, for fuel system with two filters	112-2	**87394887** Main, with Pre-Cleaner	112-5			**82033107 x 2** Foam	112-11
			84328598 Pre-Cleaner	112-3	**87682990** Main, for fine dust	112-5				
					87683000 Safety, for fine dust	112-6				
TM120 **TM130** **TM140** **TM155** After Serial Number ACM218236	**81879134** Engine oil	113-4	**87802728** Fuel system with one filter	113-1	**87394880** Main	113-5	**84248043** Hydraulic pump	113-7	**82018373 x 2** Roof	113-9
			87803441 Primary, for fuel system with two filters	113-2	**82034441** Safety	113-6	**47365582** Hydraulic pump, with 20x16 transmission	113-8	**87385322 x 2** Air conditioning	113-10
			87803444 Secondary, for fuel system with two filters	113-2	**87394887** Main, with Pre-Cleaner	113-5			**82033107 x 2** Foam	113-11
			84328598 Pre-Cleaner	113-3	**87682990** Main, for fine dust	113-5				
					87683000 Safety, for fine dust	113-6				
T6000 RCPC										
T6030 RCPC **T6050 RCPC** **T6070 RCPC** **T6080 RCPC** **T6090 RCPC** Before Serial Number 710158	**84228488** Engine	114-5	**84170818** Primary, with water separator	114-7	**87682990** Air Cleaner with Pre-Cleaner, Main, with roof with low profile	114-3	**84226263** Hydraulic Pump	114-9	**87726675 x 2** Heater & AC Conditioner	114-1
			84412164 Secondary	114-8	**87704248** Air Cleaner with Pre-Cleaner, Main, with roof with high profile	114-3	**87708150** Hydraulic System	114-10	**87726699** Heater & AC Conditioner (Recirculation)	114-2
			84167233 Pre-filter	114-8	**87683000** Air Cleaner with Pre-Cleaner, Safety	114-4				
			84328598 Pre-Cleaner	114-6						

	Oil		Fuel		Engine Air		Hydraulic		Cabin Air	
T6000 RCPC (...)										
T6030 RCPC **T6050 RCPC** **T6070 RCPC** **T6080 RCPC** **T6090 RCPC** After Serial Number 710159	**84228488** Engine	115-5	**84278636** Primary	115-7	**87682990** Air Cleaner with Pre-Cleaner, Main	115-3	**84226263** Hydraulic Pump	115-9	**87726675 x 2** Heater & AC Conditioner	115-1
			84412164 Secondary	115-8	**87704248** Air Cleaner with Pre-Cleaner, Main, with roof with high profile	115-3	**87708150** Hydraulic System	115-10	**87726699** Heater & AC Conditioner (Recirculation)	115-2
			84167233 Pre-filter	115-8	**87683000** Air Cleaner with Pre-Cleaner, Safety	115-4				
			84328598 Pre-Cleaner	115-6						
T6030E **T6050E** **T6070E** **T6080E** Before Serial Number 710158	**84228488** Engine	116-5	**84170818** Primary	116-7	**87704248** Dry Air, Main	116-3	**84226263** Hydraulic Pump	116-9	**87726675 x 2** Heater & AC Conditioner	116-1
			84412164 Secondary	116-8	**87683000** Dry Air, Safety	116-4	**47617638** Hydraulic System	116-10	**87726699** Heater & AC Conditioner (Recirculation)	116-2
			84328598 Pre-Cleaner	116-6	**87682990** Air Cleaner with Pre-Cleaner for Roof with Low Profile, Main	116-3				
					Air Cleaner with Pre-Cleaner for Roof with Low Profile, Safety	116-4				
T6030E **T6050E** **T6070E** **T6080E** After Serial Number 710159	**84228488** Engine	117-5	**84278636** Primary	117-7	**87704248** Dry Air, Main	117-3	**84226263** Hydraulic Pump	117-9	**87726675 x 2** Heater & AC Conditioner	117-1
			84412164 Secondary	117-8	**87683000** Dry Air, Safety	117-4	**47617638** Hydraulic System	117-10	**87726699** Heater & AC Conditioner (Recirculation)	117-2
			84328598 Pre-Cleaner	117-6	**87682990** Air Cleaner with Pre-Cleaner for Roof with Low Profile, Main	117-3				
					Air Cleaner with Pre-Cleaner for Roof with Low Profile, Safety	117-4				
T6.XXX										
T6.120 **T6.140**	**84228488** Engine	118-1	**84278636** Primary	118-10	**84493217** Air Cleaner, Main	118-8	**84226258** Hydraulic System (80 l/min pump)	118-2	**87726695 x 2** Heater & AC Conditioner	118-6
			84412164 Secondary	118-11	**87682992** Air Cleaner, Safety	118-9	**84248043** Hydraulic Pump 80 l/min	118-3	**87726675 x 2** Heater & AC Conditioner for Roof with High Profile	118-6
			84328598 Pre-Cleaner	118-4	**87704244** Air Cleaner with Pre-Cleaner, Main	118-8	**87708150** Hydraulic Pump 113 l/min	118-5	**87726699** Heater & AC Conditioner (Recirculation)	118-7
					87682992 Air Cleaner with Pre-Cleaner, Safety	118-9				

	Oil		Fuel		Engine Air		Hydraulic		Cabin Air	
T6.XXX (...)										
T6.155 **T6.165** **T6.175**	**84228488** Engine	119-1	**84278636** Primary	119-10	**87704248** Air Cleaner, Main	119-8	**84226258** Hydraulic System (80 l/min pump)	119-2	**87726695 x 2** Heater & AC Conditioner	119-6
			84412164 Secondary	119-11	**87683000** Air Cleaner, Safety	119-9	**84248043** Hydraulic Pump 80 l/min	119-3	**87726675 x 2** Heater & AC Conditioner for Roof with High Profile	119-6
			84328598 Pre-Cleaner	119-4	**87682990** Air Cleaner with Pre-Cleaner, Main	119-8	**87708150** Hydraulic Pump 113 l/min	119-5	**87726699** Heater & AC Conditioner (Recirculation)	119-7
					87683000 Air Cleaner with Pre-Cleaner, Safety	119-9				
TM										
TM175 **TM190** Before Serial Number ACM218235	**81879134** Engine oil	120-4	**87802728** Fuel system with one filter	120-1	**82034433** Main	120-5	**84226260** Hydraulic system	120-7	**82018373 x 2** Roof	120-10
			87840590 Primary, for fuel system with two filters	120-2	**82034435** Safety	120-6	**84226263** Hydraulic pump	120-8	**87385322 x 2** Air conditioning	120-11
			87802332 Secondary, for fuel system with two filters	120-2			**9821387** Charge Pump	120-9	**82033107 x 2** Foam	120-12
			84328598 Pre-Cleaner	120-3						
TM175 **TM190** After Serial Number ACM218236	**81879134** Engine oil	121-4	**87802728** Fuel system with one filter	121-1	**82034433** Main	121-5	**84226260** Hydraulic system	121-7	**82018373 x 2** Roof	121-10
			87803441 Primary, for fuel system with two filters	121-2	**82034435** Safety	121-6	**84226263** Hydraulic pump	121-8	**87385322 x 2** Air conditioning	121-11
			87803444 Secondary, for fuel system with two filters	121-2			**9821387** Charge Pump	121-9	**82033107 x 2** Foam	121-12
			84328598 Pre-Cleaner	121-3						
TVT										
TVT135 **TVT 155** **TVT170** **TVT190** **TVT 195**	**84287923** Engine	122-11	**84269166** Primary	122-3	**162000190700** Main	122-5	**47436570** Transmission box	122-9	**1-34-684-036** Cab Air Roof	122-2
			84269165 Secondary	122-4	**162000190710** Safety	122-6	**192310280011** Transmission suction	122-8	**1-34-584-630** Heater	122-1
							84469093 Hydraulic pump	122-10		
							47522804 Steering	122-7		
T7500										
T7510 **T7520** **T7530** **T7540** **T7550**	**84287923** Engine	123-3	**84269164** Primary	123-4	**162000190700** Main	123-6	**47436570** Transmission box	123-10	**87726699** A/C Conditioner	123-12
			84269163 Secondary	123-5	**162000190710** Safety	123-7	**192310280011** Transmission suction	123-9	**87726675** A/C Conditioner	123-11
							84237579 Hydraulic pump	123-1	**1-34-584-630** Heater	123-2
							47522804 Steering	123-8		

	Oil		Fuel		Engine Air		Hydraulic		Cabin Air	
T7000										
T7030 **T7040** **T7050** **T7060** Before Serial Number 710158	**84228488** Engine	124-1	**84170818** Primary	124-7	**87517154** Main	124-5	**84226260** Hydraulic System (120 l/min pump)	124-2	**87726675 x 2** A/C Conditioner & Heater	124-9
			84412164 Secondary	124-8	**87517153** Safety	124-6	**84476646** Hydraulic System (150 l/min pump)	124-2	**87726699** A/C Conditioner & Heater (Recirculation)	124-10
			84328598 Pre-Cleaner	124-11			**84226263** Hydraulic Pump 120 l/ min & 150 l/min	124-3		
							87708150 Hydraulic System	124-4		
T7030 **T7040** **T7050** **T7060** After Serial Number 710159	**84228488** Engine	125-1	**84278636** Primary	125-7	**87517154** Main	125-5	**84226260** Hydraulic System (120 l/min pump)	125-2	**87726675 x 2** A/C Conditioner & Heater	125-9
			84412164 Secondary	125-8	**87517153** Safety	125-6	**84476646** Hydraulic System (150 l/min pump)	125-2	**87726699** A/C Conditioner & Heater (Recirculation)	125-10
			84328598 Pre-Cleaner	125-11			**84226263** Hydraulic Pump 120 l/ min & 150 l/min	125-3		
							87708150 Hydraulic System	125-4		
T7000SW										
T7030 **T7040** **T7050** **T7060** Before Serial Number 710158	**84228488** Engine	126-1	**84170818** Primary	126-6	**87517154** Main	126-4	**84226263** Hydraulic Pump 120 l/ min & 150 l/min	126-2	**87726675 x 2** A/C Conditioner & Heater	126-8
			84412164 Secondary	126-7	**87517153** Safety	126-5	**87708150** Hydraulic System	126-3	**87726699** A/C Conditioner & Heater (Recirculation)	126-9
			84328598 Pre-Cleaner	126-10						
T7030 **T7040** **T7050** **T7060** After Serial Number 710159	**84228488** Engine	127-1	**84278636** Primary	127-6	**87517154** Main	127-4	**84226263** Hydraulic Pump 120 l/ min & 150 l/min	127-2	**87726675 x 2** A/C Conditioner & Heater	127-8
			84412164 Secondary	127-7	**87517153** Safety	127-5	**87708150** Hydraulic System	127-3	**87726699** A/C Conditioner & Heater (Recirculation)	127-9
			84328598 Pre-Cleaner	127-10						
T7000AC										
T7030 **T7040** **T7050** **TV7070** Before Serial Number 710158	**84228488** Engine	128-1	**84170818** Primary	128-10	**87517154** Main	128-5	**87588814** Vane Pump	128-8	**87726675 x 2** A/C Conditioner & Heater	128-2
			84412164 Secondary	128-11	**87517153** Safety	128-6	**87708150** Hydraulic System	128-9	**87726699** A/C Conditioner & Heater (Recirculation)	128-3
			84328598 Pre-Cleaner	128-4			**84324774** Charge Pump	128-7		
T7030 **T7040** **T7050** **TV7070** After Serial Number 710159	**84228488** Engine	129-1	**84278636** Primary	129-10	**87517154** Main	129-5	**87588814** Vane Pump	129-8	**87726675 x 2** A/C Conditioner & Heater	129-2
			84412164 Secondary	129-11	**87517153** Safety	129-6	**87708150** Suction	129-9	**87726699** A/C Conditioner & Heater (Recirculation)	129-3
			84328598 Pre-Cleaner	129-4			**84324774** Charge Pump	129-7		
T7030 **T7040** **T7050** **TV7070** After Date (14/09/2010)	**84228488** Engine	130-1	**84278636** Primary	130-10	**87517154** Main	130-6	**87588814** Vane Pump	130-9	**87726675 x 2** A/C Conditioner & Heater	130-2
			84412164 Secondary	130-11	**87517153** Safety	130-7	**87708150** Suction	130-9	**87726699** A/C Conditioner & Heater (Recirculation)	130-3
			84328598 Pre-Cleaner	130-4			**84417139** Charge Pump	130-5		

	Oil		Fuel		Engine Air		Hydraulic		Cabin Air	
T7.XXXAC										
T7.220 AC **T7.235 AC** **T7.250 AC** **T7.270 AC**	**84228488** Engine	131-1	**84278636** Primary	131-2	**87517154** Main	131-6	**87588814** Vane Pump	131-8	**87726675 x 2** A/C Conditioner & Heater	131-11
			84412164 Secondary	131-3	**87517153** Safety	131-7	**87708150** Hydraulic System	131-9	**87726699** A/C Conditioner & Heater (Recirculation)	131-12
			84328598 Pre-Cleaner	131-4			**84417139** Charge Pump	131-5		
			87718479 Bio Diesel	131-10						
T7SWB										
T7.170 RCPC **T7.185 RCPC** **T7.200 RCPC** **T7.210 RCPC**	**84228488** Engine	132-1	**84278636** Primary	132-5	**87682990** Main	132-3	**87708150** Hydraulic System	132-9	**87726675 x 2** A/C Conditioner & Heater	132-10
			84412164 Secondary	132-6	**87683000** Safety	132-4	**84226258** Hydraulic Pump 120 L/Min	132-2	**87726699** A/C Conditioner & Heater (Recirculation)	132-11
			84328598 Pre-Cleaner	132-7					**87309516** Carbon	132-8
T7.170 **T7.185** **T7.200** **T7.210**	**84228488** Engine	133-1	**84278636** Primary	133-4	**87682990** Main	133-2	**87588814** Vane Pump	133-10	**87726675 x 2** A/C Conditioner & Heater	133-12
			84412164 Secondary	133-5	**87683000** Safety	133-3	**87708150** Hydraulic System	133-11	**87726699** A/C Conditioner & Heater (Recirculation)	133-13
			84328598 Pre-Cleaner	133-6			**84417139** Charge Pump	133-8	**87309516** Carbon	133-9
							84371476 Resounding	133-7		
T7LWB										
T7.250 PC **T7.250 PC SW** **T7.260 PC**	**84228488** Engine	134-1	**84278636** Primary	134-3	**87517154** Main	134-7	**87708150** Hydraulic System	134-6	**87726675 x 2** A/C Conditioner & Heater	134-10
			84412164 Secondary	134-4	**87517153** Safety	134-8	**84226258** Hydraulic Pump 120 L/Min	134-2	**87726699** A/C Conditioner & Heater (Recirculation)	134-11
			84328598 Pre-Cleaner	134-5			**84226263** Hydraulic Pump 150 L/Min	134-2	**87309516** Carbon	134-12
			84566248 Bio Diesel	134-9						
TG										
TG 210 **TG230** **TG255** **TG285**	**84229397** Engine	135-2	**84476807** Primary	135-3	**87338668** Primary	135-9	**84226258** Charge Pump	135-8	**87684088** A/C Condition (Air)	135-5
			84557099 Secondary	135-4	**451526A1** Secondary	135-10	**84487937** Hydraulic System	135-7	**87267363** A/C Condition (Air), Charcoal	135-5
			369842A1 Separator	135-1					**87413508 x 2** A/C Condition (Ducts)	135-6
T8000										
T8010 **T8020** **T8030** **T8040** **T8050** Before Serial Number Z8RW04134	**84301243** Engine	136-3	**87360572** Primary	136-4	**87408704** Primary	136-10	**84226258** Charge Pump	136-8	**87684088** A/C Condition	136-2
			84477359 Secondary	136-5	**84476647** Secondary	136-9	**84487937** Hydraulic System	136-7	**87267363** A/C Condition (Charcoal)	136-2
			369842A1 Separator	136-1					**87413508 x 2** A/C Condition (Ducts)	136-6

	Oil		Fuel		Engine Air		Hydraulic		Cabin Air	
T8000 (...)										
T8010 **T8020** **T8030** **T8040** **T8050** After Serial Number Z8RW04135	**84301243** Engine	137-3	**87360572** Primary	137-4	**87741560** Primary	137-10	**84226258** Charge Pump	137-8	**87684088** A/C Condition	137-2
			84477359 Secondary	137-5	**87741569** Secondary	137-9	**84487937** Hydraulic System	137-7	**87267363** A/C Condition (Charcoal)	137-2
			369842A1 Separator	137-1					**87413508 x 2** A/C Condition (Ducts)	137-6
T8.XXX										
T8.275 **T8.300** **T8.330** **T8.360** **T8.390**	**84565867** Engine	138-4	**5801439820** Cartridge	138-13	**84191182** Primary	138-5	**84383316** Trailer Brake	138-11	**87684088** A/C Condition (Air)	138-12
			369842A1 Separator	138-3	**87356547** Secondary	138-6	**84356072** Charge Pump	138-10	**87267363** A/C Condition (Air), Charcoal	138-12
			84348883 with WIF sensor	138-9			**84240234** Sandard, High Flow & Mega Flow Capacity CVT	138-8	**87413508 x 2** A/C Condition (Ducts)	138-2
							84487937 Sandard, Mega & High Flow Capacity POWERSHIFT	138-1		
							84202794 Regulated Valve	138-7		

	Oil		Fuel		Engine Air		Hydraulic		Cabin Air	
TC										
AL59	**81879134** Engine oil	139-6	**87840136**	139-1	**84072431** Main	139-4	**9811443** Oil tank	139-9	**922214 x 2** Roof	139-8
			9501200 Tank strainer	139-2	**84072430** Safety	139-5	**9814477** Oil tank	139-10	**89594075** Heating	139-7
			87519301 Tank	139-3			**84031924** Oil tank	139-11		
							84031880 Hydrostatic pump	139-12		
TC52 **TC54** **TC56**	**81879134** Engine oil	140-6	**9501200** Tank strainer	140-2	**84072431** Main	140-4	**9811443** Oil tank	140-9	**922214 x 2** Roof	140-8
			87519301 Tank	140-3	**84072430** Safety	140-5	**9814477** Oil tank	140-10	**89594075** Heating	140-7
			87800220 Low pressure system	140-1			**84031924** Oil tank	140-11		
			87801285 High pressure system	140-13			**84031880** Hydrostatic pump	140-12		
TC5000										
TC5040 **TC5050** **TC5060** **TC5070** **TC5080**	**2852526** Engine oil	141-5	**9501200** Tank strainer	141-1	**84072431** Main	141-3	**84031924** Oil tank	141-10	**922214 x 2** Roof	141-7
			87519301	141-2	**84072430** Safety	141-4	**9814477** Tank Filter	141-9	**89594075** Heating	141-6
							9811443 Tank Filter	141-8		
CSX										
CSX7040 **CSX7050**	**2852526** Engine oil	142-5	**87533313**	142-11	**84072431** Main	142-1	**87054105** Filler Filter - Oil tank	142-6	**84607214** Recirculation	142-3
			336430A1 With water separator	142-12	**84072430** Safety	142-2	**9814477** Return Filter - Oil tank	142-7	**87558895** Climate control, inner	142-4
			9501200 Tank	142-13			**84031924** Suction - Oil tank	142-8	**84807659** Climate control, outer	142-4
							84453604 Oil cooler	142-9		
							84031880 Hydrostatic pump	142-10		
CX5/6000										
CX5080 **CX5090** **CX6080**	**4897898** Engine oil	143-5	**87533313**	143-11	**84072431** Main	143-1	**81863799** Hydrostatic pump	143-6	**84607214** Recirculation	143-3
			336430A1 With water separator	143-12	**84072430** Safety	143-2	**84100813** Oil cooler outlet Filter - Oil tank	143-7	**87558895** Climate control, inner	143-4
			9502050 Tank	143-13			**87054105** Filler Filter - Oil tank	143-8	**84807659** Climate control, outer	143-4
							9814477 Return Filter - Oil tank	143-9		
							84004451 Hydraulic system	143-10		
CX6090	**2996570** Engine oil	144-5	**87533313**	144-11	**84069017** Main	144-1	**81863799** Hydrostatic pump	144-6	**84607214** Recirculation	144-3
			336430A1 With water separator	144-12	**84069018** Safety	144-2	**84100813** Oil cooler outlet Filter - Oil tank	144-7	**87558895** Climate control, inner	144-4
			9502050 Tank	144-13	**87682986** Safety	144-2	**87054105** Filler Filter - Oil tank	144-8	**84807659** Climate control, outer	144-4
							9814477 Return Filter - Oil tank	144-9		
							84004451 Hydraulic system	144-10		

	Oil		Fuel		Engine Air		Hydraulic		Cabin Air	
CX8000										
CX8040 **CX8050** **CX8060** **CX8070** **CX8080**	**84346773** Engine oil	145-7	**336430A1**	145-1	**84069017** Main	145-4	**84074777** Hydrostatic pump	145-6	**87682993** Recirculation	145-11
	84226258 Engine gearbox	145-7	**84337371** With water separator	145-2	**84069018** Safety	145-5	**87054105** Hydraulic tank	145-8	**84058793** Climate control	145-12
			9501200 Tank strainer	145-3			**84453604** Oil cooler	145-10		
							84100813 Hydraulic tank	145-9		
CR										
CR960	**99445200 x 2** Engine oil	146-6	**84989840**	146-4	**84443964** Main	146-1	**84453604** Oil cooler	146-7	**84058793** Air conditioning	146-11
			89502050 Tank strainer	146-5	**84443965** Safety	146-2	**89811443** Oil tank	146-8		
					84057282 Pre-cleaner	146-3	**84100813** Oil tank strainer	146-9		
							81863799 Hydrostatic pump, 110cc	146-10		
							84031880 Hydrostatic pump, 130cc	146-10		
							81863799 x 2 Return filter	146-10		
CR980	**99445200 x 2** Engine oil	147-7	**84989840**	147-4	**84443964** Main	147-1	**84453604** Oil cooler	147-8	**84058793** Air conditioning	147-12
			89502050 Tank strainer	147-5	**84443965** Safety	147-2	**89811443** Oil tank	147-9		
			84989839 Tank	147-6	**84057282** Pre-cleaner	147-3	**84100813** Oil tank strainer	147-10		
							84031880 Hydrostatic pump, 130cc	147-11		
							81863799 x 2 Return filter	147-11		
CR9060	**504179764** Engine oil	148-4	**87533313** Tank	148-3	**86998333** Main	148-1	**87394395** Oil tank	148-6	**84058793** Air conditioning	148-10
					86998332 Safety	148-2	**84100813** Oil tank strainer	148-7		
							84074777 Hydrostatic pump	148-8		
							84453604 Oil cooler	148-5		
							81863799 x 2 Return filter	148-9		
CR9080	**504179764** Engine oil	149-4	**87519301** Tank	149-3	**86998333** Main	149-1	**87394395** Oil tank	149-6	**84058793** Air conditioning	149-10
					86998332 Safety	149-2	**84100813** Oil tank strainer	149-7		
							84074777 Hydrostatic pump	149-8		
							84453604 Oil cooler	149-5		
							81863799 x 2 Return filter	149-9		

	Oil		Fuel		Engine Air		Hydraulic		Cabin Air	
CR (...)										
CR9060 Elevation	**504179764** Engine oil	150-4	**84337371** Tank	150-3	**86998333** Main	150-1	**84453604** Hydraulic system	150-5	**84058793** Air conditioning	150-9
					86998332 Safety	150-2	**87054105** Oil tank	150-6		
							84100813 Oil tank strainer	150-7		
							84074777 Hydrostatic pump, 110cc/130cc	150-8		
							81863799 Hydrostatic pump, 165cc	150-8		
							81863799 x 2 Return filter	150-8		
CR9070 Elevation	**504082382** Engine oil	151-4	**84337371** Tank	151-3	**86998333** Main	151-1	**84453604** Hydraulic system	151-5	**84058793** Air conditioning	151-9
	504213800 Engine oil, Green filter	151-4			**86998332** Safety	151-2	**87054105** Oil tank	151-6		
							84100813 Oil tank strainer	151-7		
							84074777 Hydrostatic pump, 110cc/130cc	151-8		
							81863799 Hydrostatic pump, 165cc	151-8		
							81863799 x 2 Return filter	151-8		
CR9080 **CR9090** Elevation	**504082382** Engine oil	152-4	**84337371** Tank	152-3	**84432503** Main	152-1	**84453604** Hydraulic system	152-5	**84058793** Air conditioning	152-9
	504213800 Engine oil, Green filter	152-4			**84432504** Safety	152-2	**87054105** Oil tank	152-6		
							84100813 Oil tank strainer	152-7		
							84074777 Hydrostatic pump, 110cc/130cc	152-8		
							81863799 Hydrostatic pump, 165cc	152-8		
							81863799 x 2 Return filter	152-8		
FR										
FR9040 **FR9050** **FR9060** **FR9090**	**504082382 x 2** Engine oil	153-6	**87533341** Tank	153-3	**84432503** Main	153-1	**87054105** Oil tank filler	153-7	**84459314** Roof	153-12
			87675543 Inline	153-4	**84432504** Safety	153-2	**84100813 x 2** Oil tank strainer	153-8	**87558895** Climate control, inner	153-13
			84337371	153-5			**84168838** Oil cooler	153-9	**84807659** Climate control, outer	153-13
							84161674 Hydraulic system	153-10		
							81863799 Hydraulic system	153-11		
							81863799 Hydraulic pump	153-11		

Filter drawings
Schémas de filtres
Filterzeichnungen
Disegni dei filtri
Filtertegninger
Imágenes de filtros
Desenhos dos filtros
Tekeningen Filters
Rysunki filtrów
Чертежи фильтров
رسومات الفلاتر

TC	30
T3000	33
TT	36
TN	39
TNF	40
TNA	42
TNFA	44
TK	46
TKA	49
T4000 NVFS	52
TDD	56
TD4000F	60
TD5000	64
TL	67
TLA	69
T5000	71
T5.XXX	72
TS	73
TSA	79
T6000	84
M/60	105
TM1	109
TM2	112
T6000 RCPC	114
T6.XXX	118
TM	120
TVT	122
T7500	123
T7000	124
T7000SW	126
T7000AC	128
T7.XXXAC	131
T7SWB	132
T7LWB	134
TG	135
T8000	136
T8.XXX	138

TC	139
TC5000	141
CSX	142
CX5/6000	143
CX8000	145
CR	146
FR	153

#	Part Number	Qty	*Designation*	ⓘ
1	**87415600**		*Oil*	Engine oil
2	**87300039**		*Fuel*	
3	**83912298**		*Hydraulic*	Hydraulic pump
4	**SBA340501030**		*Hydraulic*	With internal bypass

#	Part Number	Qty	*Designation*	ⓘ
1	**86546623**		*Oil*	Engine oil
2	**SBA360720020**		*Fuel*	
3	**SBA314531174**		*Engine Air*	Main
4	**SBA314531175**		*Engine Air*	Safety
5	**SBA340500930**		*Hydraulic*	Hydraulic pump
6	**SBA340500890**		*Hydraulic*	Hydraulic system

#	Part Number	Qty	*Designation*	ⓘ
1	**SBA140517020**		*Oil*	Engine oil
2	**SBA360720020**		*Fuel*	
3	**SBA314531174**		*Engine Air*	Main
4	**SBA314531175**		*Engine Air*	Safety
5	**SBA340500930**		*Hydraulic*	Hydraulic pump
6	**SBA340500890**		*Hydraulic*	Hydraulic system

#	Part Number	Qty	*Designation*	ⓘ
1	**87289612**		*Fuel*	
2	**9978059**		*Fuel*	Separator
3	**87289613**		*Oil*	Engine
4	**87290073**		*Engine Air*	Main
5	**87290074**		*Engine Air*	Safety
6	**9976807**		*Hydraulic*	Hydraulic System
7	**9977652**		*Cabin Air*	Heater

#	Part Number	Qty	*Designation*	ⓘ
1	**87289612**		*Fuel*	
2	**9978059**		*Fuel*	Separator
3	**87289613**		*Oil*	Engine
4	**87290073**		*Engine Air*	Main
5	**87290074**		*Engine Air*	Safety
7	**9977652**		*Cabin Air*	Heater
8	**9976807**		*Hydraulic*	Hydraulic System
8	**9977794**		*Cabin Air*	AC Conditioner

#	Part Number	Qty	*Designation*	ⓘ
1	**87289612**		*Fuel*	
2	**9978059**		*Fuel*	Separator
3	**87289613**		*Oil*	Engine
4	**87290071**		*Engine Air*	Main
5	**87290072**		*Engine Air*	Safety
7	**9977652**		*Cabin Air*	Heater
8	**9976807**		*Hydraulic*	Hydraulic System
8	**9977794**		*Cabin Air*	AC Conditioner

TT TT50

#	Part Number	Qty	*Designation*	ⓘ
1	**84217953**		*Fuel*	Fuel Sedimenting Device
2	**84214564**		*Fuel*	
3	**5096729**		*Oil*	Engine oil
4	**5097103**		*Hydraulic*	Lifter Lines
6	**87704249**		*Engine Air*	Main
7	**86982523**		*Engine Air*	Safety

TT TT55

#	Part Number	Qty	*Designation*	ⓘ
1	**84217953**		*Fuel*	Fuel Sedimenting Device
2	**84214564**		*Fuel*	
3	**5096729**		*Oil*	Engine oil
4	**5097103**		*Hydraulic*	Lifter Lines
5	**1909143**		*Hydraulic*	Power Steering
6	**87704249**		*Engine Air*	Main
7	**86982523**		*Engine Air*	Safety

#	Part Number	Qty	*Designation*	ⓘ
1	**84217953**		*Fuel*	Fuel Sedimenting Device
2	**84214564**		*Fuel*	
3	**5096729**		*Oil*	Engine oil
4	**5097103**		*Hydraulic*	Lifter Lines
5	**1909143**		*Hydraulic*	Power Steering
6	**84217229**		*Engine Air*	Main
7	**87682999**		*Engine Air*	Safety

TN TN55 - TN65 - TN70 - TN75

#	Part Number	Qty	*Designation*	ⓘ
1	**84214564**		*Fuel*	
2	**84222017**		*Oil*	Engine oil
3	**87704249**		*Engine Air*	Main
4	**86982523**		*Engine Air*	Safety
5	**5194879**		*Hydraulic*	Power Shuttle transmission with heat exchanger
6	**84257511**		*Hydraulic*	

TNF TN70F-TN75F-TN80F

#	Part Number	Qty	*Designation*	ⓘ
1	**84214564**		*Fuel*	
2	**84222017**		*Oil*	Engine oil
3	**87704249**		*Engine Air*	Main
4	**86982523**		*Engine Air*	Safety
5	**5194879**		*Hydraulic*	Transmission
6	**84257511**		*Hydraulic*	Hydraulic pump
7	**44911740**		*Cabin Air*	Air Filer Carbon
7	**47137321**		*Cabin Air*	

TNF TN90F-TN95F

#	Part Number	Qty	*Designation*	ⓘ
1	**84214564**		*Fuel*	
2	**84222017**		*Oil*	Engine oil
3	**1931027**		*Engine Air*	Main
4	**1909117**		*Engine Air*	Safety
5	**5194879**		*Hydraulic*	Transmission
6	**84257511**		*Hydraulic*	Hydraulic pump
7	**44911740**		*Cabin Air*	Air Filer Carbon
7	**47137321**		*Cabin Air*	

TNA TN60A - TN70A - TN75A

#	Part Number	Qty	*Designation*	ⓘ
1	**84214564**		*Fuel*	
2	**84222017**		*Oil*	Engine oil
3	**87704249**		*Engine Air*	Main
4	**86982523**		*Engine Air*	Safety
5	**5194879**		*Hydraulic*	Power Shuttle transmission with heat exchanger
6	**84257511**		*Hydraulic*	

TNA TN85A - TN95A

#	Part Number	Qty	*Designation*	ⓘ
1	**84565884**		*Fuel*	
2	**84228488**		*Oil*	Engine oil
3	**87682993**		*Engine Air*	Main
4	**87682999**		*Engine Air*	Safety
5	**5194879**		*Hydraulic*	Power Shuttle transmission with heat exchanger
6	**84257511**		*Hydraulic*	

TNFA TN75FA (VSN included)

#	Part Number	Qty	*Designation*	ⓘ
1	**84214564**		*Fuel*	
2	**84222017**		*Oil*	Engine oil
3	**87704249**		*Engine Air*	Main
4	**86982523**		*Engine Air*	Safety
5	**5194879**		*Hydraulic*	Transmission
6	**84257511**		*Hydraulic*	Hydraulic pump
7	**47131888**	x2	*Cabin Air*	Foam
8	**47129095**	x2	*Cabin Air*	Outer - Activated Carbon
8	**47129134**	x2	*Cabin Air*	Outer - Standard
8	**84572321**	x2	*Cabin Air*	Outer - Anti-pollen
9	**47131906**		*Cabin Air*	Inner - Anti-pollen - Short
9	**47131908**		*Cabin Air*	Inner - Activated Carbon - Short
10	**47131907**		*Cabin Air*	Inner - Anti-pollen - Long
10	**47131909**		*Cabin Air*	Inner - Activated Carbon - Long

TNFA TN85FA - TN95FA (VSN included)

#	Part Number	Qty	*Designation*	ⓘ
1	**84214564**		*Fuel*	
2	**84222017**		*Oil*	Engine oil
3	**87342507**		*Engine Air*	Main
4	**1930825**		*Engine Air*	Safety
5	**5194879**		*Hydraulic*	Transmission
6	**84257511**		*Hydraulic*	Hydraulic pump
7	**47131888**	x2	*Cabin Air*	Foam
8	**47129095**	x2	*Cabin Air*	Outer - Activated Carbon
8	**47129134**	x2	*Cabin Air*	Outer - Standard
8	**84572321**	x2	*Cabin Air*	Outer - Anti-pollen
9	**47131906**		*Cabin Air*	Inner - Anti-pollen - Short
9	**47131908**		*Cabin Air*	Inner - Activated Carbon - Short
10	**47131907**		*Cabin Air*	Inner - Anti-pollen - Long
10	**47131909**		*Cabin Air*	Inner - Activated Carbon - Long

TK TK95M

#	Part Number	Qty	*Designation*	ⓘ
1	**84222017**		*Oil*	Engine oil
2	**1931027**		*Engine Air*	Main
2	**87342507**		*Engine Air*	Main, with dust ejector
3	**1909117**		*Engine Air*	Safety
4	**47425202**		*Hydraulic*	Hydraulic Pump
5	**1909143**		*Hydraulic*	Steering direction servocontrol
6	**84214564**		*Fuel*	
7	**84217953**		*Fuel*	Pre-Cleaner

#	Part Number	Qty	*Designation*	ⓘ
1	**84222017**		*Oil*	Engine oil
2	**87342507**		*Engine Air*	Main, with dust ejector
2	**87704249**		*Engine Air*	Main
3	**1909117**		*Engine Air*	Safety, with dust ejector
3	**86982523**		*Engine Air*	Safety
4	**47425202**		*Hydraulic*	Hydraulic Pump
5	**1909143**		*Hydraulic*	Steering direction servocontrol
6	**84214564**		*Fuel*	
7	**84217953**		*Fuel*	Pre-Cleaner

#	Part Number	Qty	*Designation*	ⓘ
1	**84222017**		*Oil*	Engine oil
2	**87704249**		*Engine Air*	Main
2	**87780710**		*Engine Air*	Main, with dust ejector
3	**86982523**		*Engine Air*	Safety
3	**87682967**		*Engine Air*	Safety, with dust ejector
4	**47425202**		*Hydraulic*	Hydraulic Pump
5	**1909143**		*Hydraulic*	Steering direction servocontrol
6	**84214564**		*Fuel*	

TKA TK70FA - TK70VA - TK75FA - TK75MA - TK75VA

#	Part Number	Qty	*Designation*	ⓘ
1	**84222017**		*Oil*	Engine oil
2	**87704249**		*Engine Air*	Main
2	**87780710**		*Engine Air*	Main, with dust ejector
3	**86982523**		*Engine Air*	Safety
3	**87682967**		*Engine Air*	Safety, with dust ejector
4	**47425202**		*Hydraulic*	Hydraulic Pump
5	**1909143**		*Hydraulic*	Steering direction servocontrol
6	**84214564**		*Fuel*	

TKA TK90A - TK90MA - TK100A

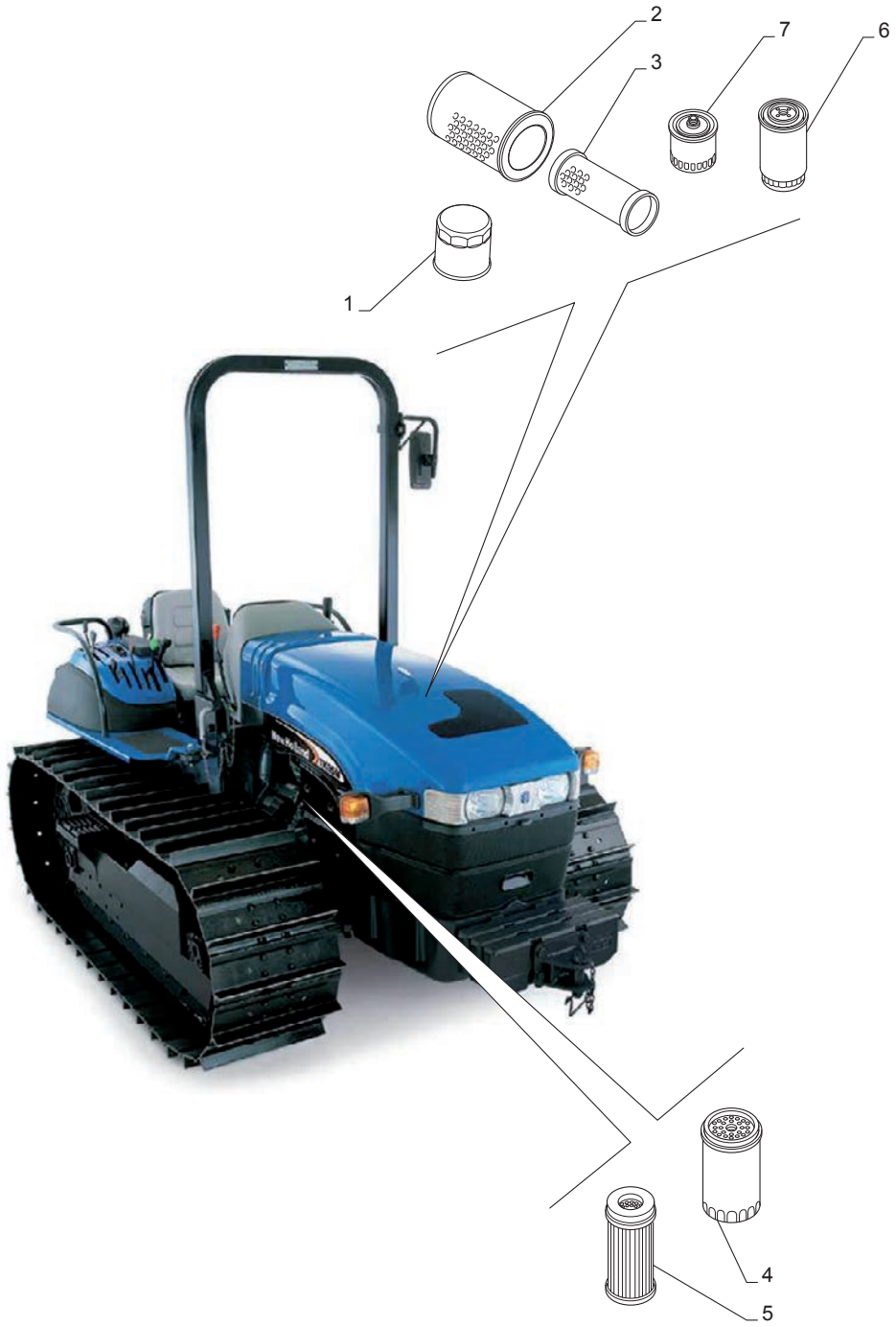

#	Part Number	Qty	*Designation*	ⓘ
1	**84222017**		*Oil*	Engine oil
2	**87342507**		*Engine Air*	Main
2	**87342507**		*Engine Air*	Main, with dust ejector
3	**1909117**		*Engine Air*	Safety, with dust ejector
3	**1930825**		*Engine Air*	Safety
4	**47425202**		*Hydraulic*	Hydraulic Pump
5	**1909143**		*Hydraulic*	Steering direction servocontrol
6	**84214564**		*Fuel*	
7	**84217953**		*Fuel*	Pre-Cleaner

TKA TK80A - TK80MA

#	Part Number	Qty	*Designation*	ⓘ
1	**84222017**		*Oil*	Engine oil
2	**87342507**		*Engine Air*	Main, with dust ejector
2	**87704249**		*Engine Air*	Main
3	**1909117**		*Engine Air*	Safety, with dust ejector
3	**86982523**		*Engine Air*	Safety
4	**47425202**		*Hydraulic*	Hydraulic Pump
5	**1909143**		*Hydraulic*	Steering direction servocontrol
6	**84214564**		*Fuel*	
7	**84217953**		*Fuel*	Pre-Cleaner

#	Part Number	Qty	*Designation*	ⓘ
1	**47367180**		*Fuel*	
2	**87679598**		*Oil*	Engine oil
3	**87704249**		*Engine Air*	Main
4	**86982523**		*Engine Air*	Safety
5	**5194879**		*Hydraulic*	Power Shuttle transmission
6	**84257511**		*Hydraulic*	Hydraulic System
7	**84329736**		*Fuel*	Inline

T4000 NVFS T4020 - T4030 Deluxe

#	Part Number	Qty	*Designation*	ⓘ
1	**87487344**		*Fuel*	
2	**87679598**		*Oil*	Engine oil
3	**87704249**		*Engine Air*	Main
4	**86982523**		*Engine Air*	Safety
5	**5194879**		*Hydraulic*	Power Shuttle transmission
6	**84257511**		*Hydraulic*	Hydraulic System
7	**47131888**	x2	*Cabin Air*	Foam
8	**47131906**		*Cabin Air*	Inner - Anti-pollen - Short
8	**47131908**		*Cabin Air*	Inner - Activated Carbon - Short
9	**47131907**		*Cabin Air*	Inner - Anti-pollen - Long
9	**47131909**		*Cabin Air*	Inner - Activated Carbon - Long
10	**47129095**	x2	*Cabin Air*	Outer - Activated Carbon
10	**84572321**	x2	*Cabin Air*	Outer - Anti-pollen
11	**47129134**	x2	*Cabin Air*	Outer - Standard

T4000 NVFS T4030 Deluxe, Japan

#	Part Number	Qty	*Designation*	ⓘ
1	**84171722**		*Fuel*	
2	**84228488**		*Oil*	Engine oil
3	**87313626**		*Engine Air*	Main - With precleaner for Supersteer front axle
4	**87313629**		*Engine Air*	Safety - With precleaner for Supersteer front axle
5	**87037984**		*Engine Air*	Main
6	**87037985**		*Engine Air*	Safety
7	**5194879**		*Hydraulic*	Power Shuttle transmission
8	**84257511**		*Hydraulic*	Hydraulic System
9	**47131888**	x2	*Cabin Air*	Foam
10	**47131906**		*Cabin Air*	Inner - Anti-pollen - Short
10	**47131908**		*Cabin Air*	Inner - Activated Carbon - Short
11	**47131907**		*Cabin Air*	Inner - Anti-pollen - Long
11	**47131909**		*Cabin Air*	Inner - Activated Carbon - Long
12	**47129095**	x2	*Cabin Air*	Outer - Activated Carbon
12	**84572321**	x2	*Cabin Air*	Outer - Anti-pollen
13	**47129134**	x2	*Cabin Air*	Outer - Standard
14	**84329736**		*Fuel*	Inline

T4000 NVFS T4040 - T4050 Deluxe

#	Part Number	Qty	*Designation*	ⓘ
1	**84171722**		*Fuel*	
2	**84228488**		*Oil*	Engine oil
3	**87313626**		*Engine Air*	Main - With precleaner for Supersteer front axle
4	**87313629**		*Engine Air*	Safety - With precleaner for Supersteer front axle
5	**87037984**		*Engine Air*	Main
6	**87037985**		*Engine Air*	Safety
7	**5194879**		*Hydraulic*	Power Shuttle transmission
8	**84257511**		*Hydraulic*	Hydraulic System
9	**47131888**	x2	*Cabin Air*	Foam
10	**47131906**		*Cabin Air*	Inner - Anti-pollen - Short
10	**47131908**		*Cabin Air*	Inner - Activated Carbon - Short
11	**47131907**		*Cabin Air*	Inner - Anti-pollen - Long
11	**47131909**		*Cabin Air*	Inner - Activated Carbon - Long
12	**47129095**	x2	*Cabin Air*	Outer - Activated Carbon
12	**84572321**	x2	*Cabin Air*	Outer - Anti-pollen
13	**47129134**	x2	*Cabin Air*	Outer - Standard
14	**84329736**		*Fuel*	Inline

TDD TD60D - TD80D Before Date 05/09/09

#	Part Number	Qty	*Designation*	ⓘ
1	**84217953**		*Fuel*	Fuel sedimenting Device
2	**87682993**		*Engine Air*	Main, with dust ejector
2	**87704249**		*Engine Air*	Main
3	**86982523**		*Engine Air*	Safety
3	**87682999**		*Engine Air*	Safety, with dust ejector
4	**5096729**		*Oil*	Engine, TTF Engine Tier 2
4	**84222017**		*Oil*	Engine
5	**84214564**		*Fuel*	
5	**98439682**		*Fuel*	TTF Engine Tier 2
6	**4987747**		*Engine Air*	With oil bath air cleaner
7	**1909143**		*Hydraulic*	Power Steering
8	**47425202**		*Hydraulic*	Hydraulic Pump
9	**5097838**		*Cabin Air*	Heater (Carbon)
9	**87603874**		*Cabin Air*	AC Conditioner & Heater
10	**87574476**	x2	*Cabin Air*	Air Louver

TDD TD60D - TD80D After Date 05/09/09

#	Part Number	Qty	*Designation*	ⓘ
1	**84217953**		*Fuel*	Fuel sedimenting Device
2	**87682993**		*Engine Air*	Main, with dust ejector
2	**87704249**		*Engine Air*	Main
3	**86982523**		*Engine Air*	Safety
3	**87682999**		*Engine Air*	Safety, with dust ejector
4	**5096729**		*Oil*	Engine, TTF Engine Tier 2
4	**84222017**		*Oil*	Engine
5	**84214564**		*Fuel*	
5	**98439682**		*Fuel*	TTF Engine Tier 2
6	**4987747**		*Engine Air*	With oil bath air cleaner
7	**1909143**		*Hydraulic*	Power Steering
8	**84257511**		*Hydraulic*	Hydraulic Pump
9	**5097838**		*Cabin Air*	Heater (Carbon)
9	**87603874**		*Cabin Air*	AC Conditioner & Heater
10	**87574476**	x2	*Cabin Air*	Air Louver

TDD TD70D - TD90D - TD95D Before Date 05/09/09

#	Part Number	Qty	*Designation*	ⓘ
1	**84217953**		*Fuel*	Fuel sedimenting Device
2	**84217229**		*Engine Air*	Main
2	**87682993**		*Engine Air*	Main, with dust ejector
3	**87682999**		*Engine Air*	Safety
4	**5096729**		*Oil*	Engine, TTF Engine Tier 2
4	**84222017**		*Oil*	Engine
5	**84214564**		*Fuel*	
5	**98439682**		*Fuel*	TTF Engine Tier 2
6	**4987747**		*Engine Air*	With oil bath air cleaner
7	**1909143**		*Hydraulic*	Power Steering
8	**47425202**		*Hydraulic*	Hydraulic Pump
9	**5097838**		*Cabin Air*	Heater (Carbon)
9	**87603874**		*Cabin Air*	AC Conditioner & Heater
10	**87574476**	x2	*Cabin Air*	Air Louver

TDD TD70D - TD90D - TD95D After Date 05/09/09

#	Part Number	Qty	*Designation*	ⓘ
1	**84217953**		*Fuel*	Fuel sedimenting Device
2	**84217229**		*Engine Air*	Main
2	**87682993**		*Engine Air*	Main, with dust ejector
3	**87682999**		*Engine Air*	Safety
4	**5096729**		*Oil*	Engine, TTF Engine Tier 2
4	**84222017**		*Oil*	Engine
5	**84214564**		*Fuel*	
5	**98439682**		*Fuel*	TTF Engine Tier 2
6	**4987747**		*Engine Air*	With oil bath air cleaner
7	**1909143**		*Hydraulic*	Power Steering
8	**84257511**		*Hydraulic*	Hydraulic Pump
9	**5097838**		*Cabin Air*	Heater (Carbon)
9	**87603874**		*Cabin Air*	AC Conditioner & Heater
10	**87574476**	x2	*Cabin Air*	Air Louver

TD4000F T4030F - T4040F With CAB

#	Part Number	Qty	*Designation*	ⓘ
1	**84477495**		*Fuel*	
2	**87679598**		*Oil*	Engine oil
3	**87037984**		*Engine Air*	Main
4	**87037985**		*Engine Air*	Safety
5	**5194879**		*Hydraulic*	Gearbox lube line
6	**84257511**		*Hydraulic*	Hydraulic Pump
7	**84572321**	x2	*Cabin Air*	Air
8	**47129134**	x2	*Cabin Air*	Air conditioning
9	**47131906**		*Cabin Air*	Inner - Anti-pollen - Short

#	Part Number	Qty	*Designation*	ⓘ
1	**84477495**		*Fuel*	
2	**87679598**		*Oil*	Engine oil
3	**87037984**		*Engine Air*	Main
4	**87037985**		*Engine Air*	Safety
5	**5194879**		*Hydraulic*	Gearbox lube line
6	**84257511**		*Hydraulic*	Hydraulic Pump

TD4000F T4050F - T4060F With CAB

#	Part Number	Qty	*Designation*	ⓘ
1	**84565884**		*Fuel*	
2	**84475545**		*Oil*	Engine oil
3	**87037984**		*Engine Air*	Main
4	**87037985**		*Engine Air*	Safety
5	**5194879**		*Hydraulic*	Gearbox lube line
6	**84257511**		*Hydraulic*	Hydraulic Pump
7	**84572321**	x2	*Cabin Air*	Air
8	**47129134**	x2	*Cabin Air*	Air conditioning
9	**47131906**		*Cabin Air*	Inner - Anti-pollen - Short

TD4000F T4050F - T4060F Without CAB

#	Part Number	Qty	*Designation*	ⓘ
1	**84565884**		*Fuel*	
2	**84475545**		*Oil*	Engine oil
3	**87037984**		*Engine Air*	Main
4	**87037985**		*Engine Air*	Safety
5	**5194879**		*Hydraulic*	Gearbox lube line
6	**84257511**		*Hydraulic*	Hydraulic Pump

TD5000 TD5010-TD5020-TD5030

#	Part Number	Qty	*Designation*	ⓘ
1	**5194879**		*Hydraulic*	Steering
2	**84257511**		*Hydraulic*	Transmission
3	**84217229**		*Engine Air*	Main
4	**87682999**		*Engine Air*	Safety
5	**47367180**		*Fuel*	
6	**87679598**		*Oil*	Engine
7	**5097838**		*Cabin Air*	Heater, Activated Carbon
7	**87603874**		*Cabin Air*	A/C, Heater
8	**87574476**	x2	*Cabin Air*	Air Louver
9	**87329736**		*Fuel*	Inline

TD5000 TD5040-TD5050

#	Part Number	Qty	*Designation*	ⓘ
1	**5194879**		*Hydraulic*	Steering
2	**84257511**		*Hydraulic*	Transmission
3	**84217229**		*Engine Air*	Main
4	**87682999**		*Engine Air*	Safety
5	**84565884**		*Fuel*	
6	**84228488**		*Oil*	Engine
7	**5097838**		*Cabin Air*	Heater, Activated Carbon
7	**87603874**		*Cabin Air*	A/C, Heater
8	**87574476**	x2	*Cabin Air*	Air Louver
9	**87329736**		*Fuel*	Inline

TD5000 TD5030-TD5040 Japan Market

#	Part Number	Qty	*Designation*	ⓘ
1	**5194879**		*Hydraulic*	Steering
2	**84257511**		*Hydraulic*	Transmission
3	**84217229**		*Engine Air*	Main
4	**87682999**		*Engine Air*	Safety
5	**84477495**		*Fuel*	
6	**87679598**		*Oil*	Engine
7	**5097838**		*Cabin Air*	Heater, Activated Carbon
7	**87603874**		*Cabin Air*	A/C, Heater
8	**87574476**	x2	*Cabin Air*	Air Louver

#	Part Number	Qty	*Designation*	ⓘ
1	**84214564**		*Fuel*	
2	**84217953**		*Fuel*	Pre-Cleaner
3	**84221215**		*Oil*	Engine oil
4	**87704249**		*Engine Air*	Main
4	**87780710**		*Engine Air*	Main, with dust ejector
5	**86982523**		*Engine Air*	Safety
5	**87682967**		*Engine Air*	Safety, with dust ejector
6	**5194879**		*Hydraulic*	Power shuttle transmission, with Hi-Lo
7	**1909143**		*Hydraulic*	Steering direction servocontrol - 2WD
8	**84399618**		*Hydraulic*	Steering direction servocontrol - 2WD & 4WD
9	**5196842**	x2	*Cabin Air*	Main
10	**82033107**	x2	*Cabin Air*	Foam

TL TL90 - TL100

#	Part Number	Qty	*Designation*	ⓘ
1	**84214564**		*Fuel*	
2	**84217953**		*Fuel*	Pre-Cleaner
3	**84221215**		*Oil*	Engine oil
4	**1930605**		*Engine Air*	Main, with dust ejector
4	**87682993**		*Engine Air*	Main
5	**1930825**		*Engine Air*	Safety, with dust ejector
5	**87682999**		*Engine Air*	Safety
6	**5194879**		*Hydraulic*	Power shuttle transmission, with Hi-Lo
7	**1909143**		*Hydraulic*	Steering direction servocontrol - 2WD
8	**84399618**		*Hydraulic*	Steering direction servocontrol - 2WD & 4WD
9	**5196842**	x2	*Cabin Air*	Main
10	**82033107**	x2	*Cabin Air*	Foam

TLA TL70A - TL80A - TL90A - TL100A Before Engine Serial Number 400031

#	Part Number	Qty	*Designation*	ⓘ
1	**84565884**		*Fuel*	
2	**84228488**		*Oil*	Engine oil
3	**84217229**		*Engine Air*	Main, with dust ejector
3	**87682993**		*Engine Air*	Main
4	**87682999**		*Engine Air*	Safety
5	**5194879**		*Hydraulic*	Power shuttle transmission
6	**84257511**		*Hydraulic*	Hydraulic system
7	**82033107**	x2	*Cabin Air*	Foam
8	**5196842**	x2	*Cabin Air*	Main

TLA TL70A - TL80A - TL90A - TL100A After Engine Serial Number 400032

#	Part Number	Qty	*Designation*	ⓘ
1	**2854796**		*Fuel*	
2	**84228488**		*Oil*	Engine oil
3	**84217229**		*Engine Air*	Main, with dust ejector
3	**87682993**		*Engine Air*	Main
4	**87682999**		*Engine Air*	Safety
5	**5194879**		*Hydraulic*	Power shuttle transmission
6	**84257511**		*Hydraulic*	Hydraulic system
7	**82033107**	x2	*Cabin Air*	Foam
8	**5196842**	x2	*Cabin Air*	Main

#	Part Number	Qty	*Designation*	ⓘ
1	**84228488**		*Oil*	Engine Oil Filter
2	**87329736**		*Fuel*	Inline
3	**84565884**		*Fuel*	W/Water Separator
4	**87037985**		*Engine Air*	Safety
5	**87037984**		*Engine Air*	Main
6	**84257511**		*Hydraulic*	Pump
7	**5194879**		*Hydraulic*	Transmission
8	**5196842**	x2	*Cabin Air*	Air Intake
9	**82033107**	x2	*Cabin Air*	Air Intake - Primary

T5.XXX T5.95 - T5.105 - T5.115

#	Part Number	Qty	*Designation*	ⓘ
1	**87679598**		*Oil*	Engine Oil Filter
2	**5801585394**		*Fuel*	Primary
3	**47450038**		*Fuel*	Secondary
4	**84479228**		*Engine Air*	Main
5	**84479225**		*Engine Air*	Safety
6	**84248043**		*Hydraulic*	Hydraulic Pump 61 l/min
6	**84581942**		*Hydraulic*	Hydraulic Pump 80 l/min
7	**84564510**		*Hydraulic*	Hydrostatic Steering; Delivery Pipe
8	**84577445**	x2	*Cabin Air*	Climate Control; Cab mounted
9	**84579424**	x2	*Cabin Air*	Climate Control; Fender mounted
10	**5194879**		*Hydraulic*	Hydrostatic Steering; Return Pipe
11	**84328598**		*Fuel*	Pre-Cleaner

TS TS90 Before Engine Serial Number 139306

#	Part Number	Qty	*Designation*	ⓘ
1	**82027153**		*Engine Air*	Main
2	**82008601**		*Engine Air*	Safety
3	**84465005**		*Engine Air*	Oil bath
4	**85804347**		*Engine Air*	Pre-Cleaner
5	**82926173**		*Engine Air*	Oil bath - Pre-Cleaner
6	**47548101**	x2	*Cabin Air*	Heater, Primary
7	**82033107**	x2	*Cabin Air*	Heater, Secondary
8	**82018373**	x2	*Cabin Air*	AC Conditioner
9	**81879134**		*Oil*	Engine
10	**84248043**		*Hydraulic*	Hydraulic Pump
10	**84248043**		*Hydraulic*	Hydraulic Pump CCLS (Lift Intake)
11	**84226258**		*Hydraulic*	Hydraulic Pump CCLS (Charge Pump)
12	**81869132**		*Hydraulic*	Hydraulic Pump CCLS (Power Steering)
12	**81869132**		*Hydraulic*	Auxliary Pump, 98x 208
13	**82003166**		*Hydraulic*	Transmission 24x24 Filter
14	**F0NNB486AA**		*Hydraulic*	Auxliary Pump, 3.86 x 6.57
15	**87801285**		*Fuel*	Injection
16	**83916922**		*Fuel*	Separator Fuel/Water

TS TS100-TS110 Before Engine Serial Number 139306

#	Part Number	Qty	*Designation*	ⓘ
1	**82027153**		*Engine Air*	Main
2	**82008601**		*Engine Air*	Safety
3	**85804347**		*Engine Air*	Pre-Cleaner
4	**47548101**	x2	*Cabin Air*	Heater, Primary
5	**82033107**	x2	*Cabin Air*	Heater, Secondary
6	**82018373**	x2	*Cabin Air*	AC Conditioner
7	**81879134**		*Oil*	Engine
8	**84248043**		*Hydraulic*	Hydraulic Pump
8	**84248043**		*Hydraulic*	Hydraulic Pump CCLS(Lift Intake)
9	**84226258**		*Hydraulic*	Hydraulic Pump CCLS (Charge Pump)
10	**81869132**		*Hydraulic*	Hydraulic Pump CCLS (Power Steering)
10	**81869132**		*Hydraulic*	Auxliary Pump, 98x 208
11	**82003166**		*Hydraulic*	Transmission 24x24 Filter
12	**F0NNB486AA**		*Hydraulic*	Auxliary Pump, 3.86 x 6.57
13	**87801285**		*Fuel*	Injection
14	**83916922**		*Fuel*	Separator Fuel/Water

TS TS115 Before Engine Serial Number 139306

#	Part Number	Qty	*Designation*	ⓘ
1	**82027153**		*Engine Air*	Main
2	**82008601**		*Engine Air*	Safety
3	**85804347**		*Engine Air*	Pre-Cleaner
4	**47548101**	x2	*Cabin Air*	Heater, Primary
5	**82033107**	x2	*Cabin Air*	Heater, Secondary
6	**82018373**	x2	*Cabin Air*	AC Conditioner
7	**84518337**		*Oil*	Engine
8	**84248043**		*Hydraulic*	Hydraulic Pump
8	**84248043**		*Hydraulic*	Hydraulic Pump CCLS(Lift Intake)
9	**84226258**		*Hydraulic*	Hydraulic Pump CCLS (Charge Pump)
10	**81869132**		*Hydraulic*	Hydraulic Pump CCLS (Power Steering)
10	**81869132**		*Hydraulic*	Auxliary Pump
11	**82003166**		*Hydraulic*	Transmission 24x24 Filter
12	**87801285**		*Fuel*	Injection
13	**83916922**		*Fuel*	Separator Fuel/Water

TS TS90 After Engine Serial Number 139307

#	Part Number	Qty	*Designation*	ⓘ
1	**82027153**		*Engine Air*	Main
2	**82008601**		*Engine Air*	Safety
3	**84465005**		*Engine Air*	Oil bath
4	**85804347**		*Engine Air*	Pre-Cleaner
5	**82926173**		*Engine Air*	Oil bath - Pre-Cleaner
6	**82014824**	x2	*Cabin Air*	Heater, Primary
7	**82033107**	x2	*Cabin Air*	Heater, Secondary
8	**82018373**	x2	*Cabin Air*	AC Conditioner
9	**81879134**		*Oil*	Engine
10	**84248043**		*Hydraulic*	Hydraulic Pump
10	**84248043**		*Hydraulic*	Hydraulic Pump CCLS(Lift Intake)
11	**84226258**		*Hydraulic*	Hydraulic Pump CCLS (Charge Pump)
12	**81869132**		*Hydraulic*	Hydraulic Pump CCLS (Power Steering)
12	**81869132**		*Hydraulic*	Auxliary Pump, 98x 208
13	**82003166**		*Hydraulic*	Transmission 24x24 Filter
14	**F0NNB486AA**		*Hydraulic*	Auxliary Pump, 3.86 x 6.57
15	**87801285**		*Fuel*	Injection
16	**83916922**		*Fuel*	Separator Fuel/Water

TS TS100-TS110 After Engine Serial Number 139307

#	Part Number	Qty	*Designation*	ⓘ
1	**82027153**		*Engine Air*	Main
2	**82008601**		*Engine Air*	Safety
3	**85804347**		*Engine Air*	Pre-Cleaner
4	**82014824**	x2	*Cabin Air*	Heater, Primary
5	**82033107**	x2	*Cabin Air*	Heater, Secondary
6	**82018373**	x2	*Cabin Air*	AC Conditioner
7	**81879134**		*Oil*	Engine
8	**84248043**		*Hydraulic*	Hydraulic Pump
8	**84248043**		*Hydraulic*	Hydraulic Pump CCLS(Lift Intake)
9	**84226258**		*Hydraulic*	Hydraulic Pump CCLS (Charge Pump)
10	**81869132**		*Hydraulic*	Hydraulic Pump CCLS (Power Steering)
10	**81869132**		*Hydraulic*	Auxliary Pump, 98x 208
11	**82003166**		*Hydraulic*	Transmission 24x24 Filter
12	**F0NNB486AA**		*Hydraulic*	Auxliary Pump, 3.86 x 6.57
13	**87801285**		*Fuel*	Injection
14	**83916922**		*Fuel*	Separator Fuel/Water

TS TS115 After Engine Serial Number 139307

#	Part Number	Qty	*Designation*	ⓘ
1	**82027153**		*Engine Air*	Main
2	**82008601**		*Engine Air*	Safety
3	**85804347**		*Engine Air*	Pre-Cleaner
4	**82014824**	x2	*Cabin Air*	Heater, Primary
5	**82033107**	x2	*Cabin Air*	Heater, Secondary
6	**82018373**	x2	*Cabin Air*	AC Conditioner
7	**84518337**		*Oil*	Engine
8	**84248043**		*Hydraulic*	Hydraulic Pump
8	**84248043**		*Hydraulic*	Hydraulic Pump CCLS(Lift Intake)
9	**84226258**		*Hydraulic*	Hydraulic Pump CCLS (Charge Pump)
10	**81869132**		*Hydraulic*	Hydraulic Pump CCLS (Power Steering)
10	**81869132**		*Hydraulic*	Auxliary Pump
11	**82003166**		*Hydraulic*	Transmission 24x24 Filter
12	**87801285**		*Fuel*	Injection
13	**83916922**		*Fuel*	Separator Fuel/Water

TSA TS100A - TS115A

#	Part Number	Qty	*Designation*	ⓘ
1	**84565884**		*Fuel*	
2	**84228488**		*Oil*	Engine oil
3	**84493217**		*Engine Air*	Main
3	**87704244**		*Engine Air*	Main, with Pre-Cleaner
4	**87682992**		*Engine Air*	Safety
4	**87682992**		*Engine Air*	Safety, with Pre-Cleaner
5	**84226258**		*Hydraulic*	Gearbox control system
6	**84248043**		*Hydraulic*	Hydraulic system
7	**84226263**		*Hydraulic*	Hydraulic pump
8	**84226260**		*Hydraulic*	Hydraulic system, with 16x16 or 24x24 transmission
9	**87309516**	x2	*Cabin Air*	Air conditioning, with High Profile Roof (Carbon)
9	**87726675**	x2	*Cabin Air*	Air conditioning, with High Profile Roof
10	**87726699**		*Cabin Air*	Recirculation
11	**87726695**	x2	*Cabin Air*	Air conditioning, with Low Profile Roof

TSA TS110A - TS125A

#	Part Number	Qty	*Designation*	ⓘ
1	**84170818**		*Fuel*	Primary
2	**84412164**		*Fuel*	Secondary
3	**84228488**		*Oil*	Engine oil
4	**84493217**		*Engine Air*	Main
4	**87704244**		*Engine Air*	Main, with Pre-Cleaner
5	**87682992**		*Engine Air*	Safety
5	**87682992**		*Engine Air*	Safety, with Pre-Cleaner
6	**84226258**		*Hydraulic*	Gearbox control system
7	**84248043**		*Hydraulic*	Hydraulic system
8	**84226263**		*Hydraulic*	Hydraulic pump
9	**84226260**		*Hydraulic*	Hydraulic system, with 16x16 or 24x24 transmission
10	**87309516**	x2	*Cabin Air*	Air conditioning, with High Profile Roof (Carbon)
10	**87726675**	x2	*Cabin Air*	Air conditioning, with High Profile Roof
11	**87726699**		*Cabin Air*	Recirculation
12	**87726695**	x2	*Cabin Air*	Air conditioning, with Low Profile Roof

TSA TS135A

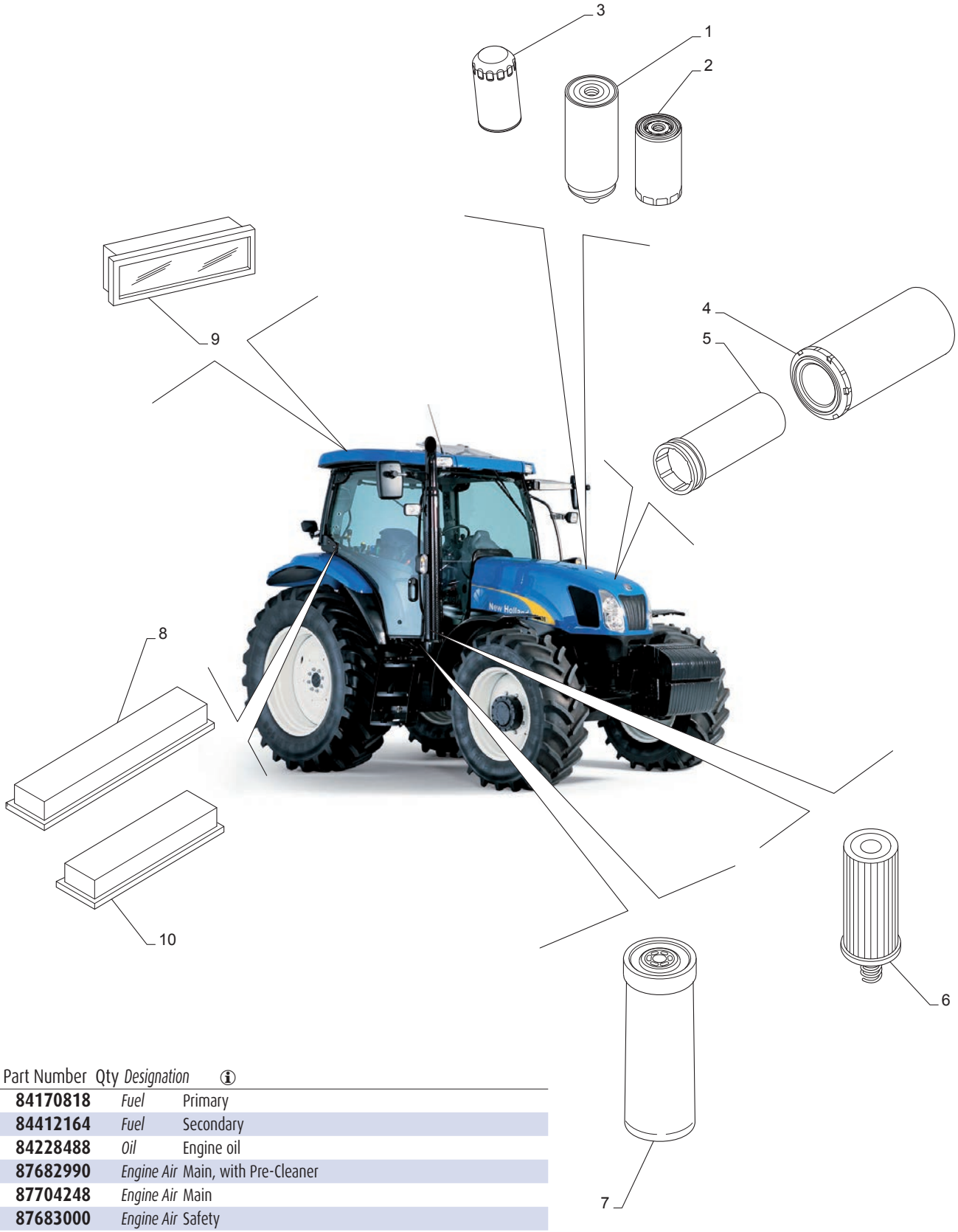

#	Part Number	Qty	*Designation*	ⓘ
1	**84170818**		*Fuel*	Primary
2	**84412164**		*Fuel*	Secondary
3	**84228488**		*Oil*	Engine oil
4	**87682990**		*Engine Air*	Main, with Pre-Cleaner
4	**87704248**		*Engine Air*	Main
5	**87683000**		*Engine Air*	Safety
5	**87683000**		*Engine Air*	Safety, with Pre-Cleaner
6	**84226260**		*Hydraulic*	Hydraulic system
7	**84226263**		*Hydraulic*	Hydraulic pump
8	**87309516**	x2	*Cabin Air*	Air conditioning, with High Profile Roof (Carbon)
8	**87726675**	x2	*Cabin Air*	Air conditioning, with High Profile Roof
9	**87726699**		*Cabin Air*	Recirculation
10	**87726695**	x2	*Cabin Air*	Air conditioning, with Low Profile Roof

TSA TS100A - TS110A Standard

#	Part Number	Qty	*Designation*	ⓘ
1	**84565884**		*Fuel*	
2	**84228488**		*Oil*	Engine oil
3	**84493217**		*Engine Air*	Main
3	**87704244**		*Engine Air*	Main, with Pre-Cleaner
4	**87682992**		*Engine Air*	Safety
4	**87682992**		*Engine Air*	Safety, with Pre-Cleaner
5	**84226258**		*Hydraulic*	Gearbox control system
6	**84226258**		*Hydraulic*	Hydraulic system, with 16x16 transmission
7	**84248043**		*Hydraulic*	Hydraulic system
8	**87726675**		*Cabin Air*	Air conditioning, with High Profile Roof
9	**87726695**		*Cabin Air*	Air conditioning, with Low Profile Roof
10	**87726699**		*Cabin Air*	Recirculation

TSA TS115A - TS130A Standard

#	Part Number	Qty	*Designation*	ⓘ
1	**84565884**		*Fuel*	
2	**84228488**		*Oil*	Engine oil
3	**87682990**		*Engine Air*	Main, with Pre-Cleaner
3	**87704248**		*Engine Air*	Main
4	**87683000**		*Engine Air*	Safety
4	**87683000**		*Engine Air*	Safety, with Pre-Cleaner
5	**84226258**		*Hydraulic*	Gearbox control system
6	**84226258**		*Hydraulic*	Hydraulic system, with 16x16 transmission
7	**84248043**		*Hydraulic*	Hydraulic system
8	**87726675**		*Cabin Air*	Air conditioning, with High Profile Roof
9	**87726695**		*Cabin Air*	Air conditioning, with Low Profile Roof
10	**87726699**		*Cabin Air*	Recirculation

T6000 T6010-T6020 Delta Version Before Serial Number 710158

#	Part Number	Qty	*Designation*	ⓘ
1	**87726695**	x2	*Cabin Air*	Heater & AC Conditioner
2	**87726699**		*Cabin Air*	Heater & AC Conditioner (Recirculation)
3	**84493217**		*Engine Air*	Main
3	**87704244**		*Engine Air*	Main, with Pre-Cleaner
4			*Engine Air*	
4	**87682992**		*Engine Air*	Safety
5	**84228488**		*Oil*	Engine
6	**84328598**		*Fuel*	Pre-Cleaner
7	**84565884**		*Fuel*	
8	**84226258**		*Hydraulic*	Hydraulic System (63 l/min pump) with 12x12 or 24x24 transmission
9	**84248043**		*Hydraulic*	Hydraulic System (63 l/min pump) with 16x16 transmission

T6000 T6010-T6020 Delta Version After Serial Number 710159

#	Part Number	Qty	*Designation*	ⓘ
1	**87726695**	x2	*Cabin Air*	Heater & AC Conditioner
2	**87726699**		*Cabin Air*	Heater & AC Conditioner (Recirculation)
3	**84493217**		*Engine Air*	Main
3	**87704244**		*Engine Air*	Main, with Pre-Cleaner
4	**87682992**		*Engine Air*	Safety
5	**84228488**		*Oil*	Engine
6	**84328598**		*Fuel*	Pre-Cleaner
7	**84526251**		*Fuel*	
8	**84226258**		*Hydraulic*	Hydraulic System (63 l/min pump) with 12x12 or 24x24 transmission
9	**84248043**		*Hydraulic*	Hydraulic System (63 l/min pump) with 16x16 transmission

T6000 T6030-T6050 Delta Version Before Serial Number 710158

#	Part Number	Qty	*Designation*	ⓘ
1	**87726695**	x2	*Cabin Air*	Heater & AC Conditioner
2	**87726699**		*Cabin Air*	Heater & AC Conditioner (Recirculation)
3	**87682990**		*Engine Air*	Main, with Pre-Cleaner
3	**87704248**		*Engine Air*	Main
4	**87683000**		*Engine Air*	Safety
5	**84228488**		*Oil*	Engine
6	**84328598**		*Fuel*	Pre-Cleaner
7	**84565884**		*Fuel*	
8	**84226258**		*Hydraulic*	Hydraulic System (63 l/min pump) with 12x12 or 24x24 transmission
9	**84248043**		*Hydraulic*	Hydraulic System (63 l/min pump) with 16x16 transmission

T6000 T6030-T6050 Delta Version After Serial Number 710159

#	Part Number	Qty	*Designation*	ⓘ
1	**87726695**	x2	*Cabin Air*	Heater & AC Conditioner
2	**87726699**		*Cabin Air*	Heater & AC Conditioner (Recirculation)
3	**87682990**		*Engine Air*	Main, with Pre-Cleaner
3	**87704248**		*Engine Air*	Main
4	**87683000**		*Engine Air*	Safety
5	**84228488**		*Oil*	Engine
6	**84328598**		*Fuel*	Pre-Cleaner
7	**84526251**		*Fuel*	
8	**84226258**		*Hydraulic*	Hydraulic System (63 l/min pump) with 12x12 or 24x24 transmission
9	**84248043**		*Hydraulic*	Hydraulic System (63 l/min pump) with 16x16 transmission

T6000 T6010-T6020 Plus Version Before Serial Number 710158

#	Part Number	Qty	*Designation*	ⓘ
1	**87726675**	x2	*Cabin Air*	Heater & AC Conditioner
2	**87726699**		*Cabin Air*	Heater & AC Conditioner (Recirculation)
3	**84493217**		*Engine Air*	Main
3	**87704244**		*Engine Air*	Main, with Pre-Cleaner
4	**87682992**		*Engine Air*	Safety
5	**84228488**		*Oil*	Engine
6	**84328598**		*Fuel*	Pre-Cleaner
7	**84565884**		*Fuel*	
8	**84226258**		*Hydraulic*	Hydraulic System (80 l/min pump) with 24x24 transmission
9	**84226263**		*Hydraulic*	Hydraulic Pump 113 l/min
10	**84226260**		*Hydraulic*	Hydraulic System (113 l/min pump)
11	**84248043**		*Hydraulic*	Hydraulic System (80 l/min pump) with SPS transmission

T6000 T6010-T6020 Plus Version After Serial Number 710159

#	Part Number	Qty	*Designation*	ⓘ
1	**87726675**	x2	*Cabin Air*	Heater & AC Conditioner
2	**87726699**		*Cabin Air*	Heater & AC Conditioner (Recirculation)
3	**84493217**		*Engine Air*	Main
3	**87704244**		*Engine Air*	Main, with Pre-Cleaner
4	**87682992**		*Engine Air*	Safety
5	**84228488**		*Oil*	Engine
6	**84328598**		*Fuel*	Pre-Cleaner
7	**84526251**		*Fuel*	
8	**84226258**		*Hydraulic*	Hydraulic System (80 l/min pump) with 24x24 transmission
9	**84226263**		*Hydraulic*	Hydraulic Pump 113 l/min
10	**84226260**		*Hydraulic*	Hydraulic System (113 l/min pump)
11	**84248043**		*Hydraulic*	Hydraulic System (80 l/min pump) with SPS transmission

T6000 T6030-T6050-T6070 Plus Version Before Serial Number 710158

#	Part Number	Qty	*Designation*	ⓘ
1	**87726675**	x2	*Cabin Air*	Heater & AC Conditioner
2	**87726699**		*Cabin Air*	Heater & AC Conditioner (Recirculation)
3	**87682990**		*Engine Air*	Main, with Pre-Cleaner
3	**87704248**		*Engine Air*	Main
4	**87683000**		*Engine Air*	Safety
5	**84228488**		*Oil*	Engine
6	**84328598**		*Fuel*	Pre-Cleaner
7	**84565884**		*Fuel*	
8	**84226258**		*Hydraulic*	Hydraulic System (80 l/min pump) with 24x24 transmission
9	**84226263**		*Hydraulic*	Hydraulic Pump 113 l/min
10	**84226260**		*Hydraulic*	Hydraulic System (113 l/min pump)
11	**84248043**		*Hydraulic*	Hydraulic System (80 l/min pump) with SPS transmission

T6000 T6030-T6050-T6070 Plus Version After Serial Number 710159

#	Part Number	Qty	*Designation*	ⓘ
1	**87726675**	x2	*Cabin Air*	Heater & AC Conditioner
2	**87726699**		*Cabin Air*	Heater & AC Conditioner (Recirculation)
3	**87682990**		*Engine Air*	Main, with Pre-Cleaner
3	**87704248**		*Engine Air*	Main
4	**87683000**		*Engine Air*	Safety
5	**84228488**		*Oil*	Engine
6	**84328598**		*Fuel*	Pre-Cleaner
7	**84526251**		*Fuel*	
8	**84226258**		*Hydraulic*	Hydraulic System (80 l/min pump) with 24x24 transmission
9	**84226263**		*Hydraulic*	Hydraulic Pump 113 l/min
10	**84226260**		*Hydraulic*	Hydraulic System (113 l/min pump)
11	**84248043**		*Hydraulic*	Hydraulic System (80 l/min pump) with SPS transmission

T6000 T6050 Plus Version Before Serial Number 710158 Without Cab

#	Part Number	Qty	*Designation*	ⓘ
1	**87726675**	x2	*Cabin Air*	Heater & AC Conditioner
2	**87726699**		*Cabin Air*	Heater & AC Conditioner (Recirculation)
3	**87682990**		*Engine Air*	Main, with Pre-Cleaner
3	**87704248**		*Engine Air*	Main
4	**87683000**		*Engine Air*	Safety
5	**84228488**		*Oil*	Engine
6	**84328598**		*Fuel*	Pre-Cleaner
7	**84565884**		*Fuel*	
8	**84226258**		*Hydraulic*	Hydraulic Pump 113 l/min
9	**84226260**		*Hydraulic*	Hydraulic System (113 l/min pump)
10	**84248043**		*Hydraulic*	Hydraulic System (80 l/min pump)

T6000 T6050 Plus Version After Serial Number 710159 Without Cab

#	Part Number	Qty	*Designation*	ⓘ
1	**87726675**	x2	*Cabin Air*	Heater & AC Conditioner
2	**87726699**		*Cabin Air*	Heater & AC Conditioner (Recirculation)
3	**87682990**		*Engine Air*	Main, with Pre-Cleaner
3	**87704248**		*Engine Air*	Main
4	**87683000**		*Engine Air*	Safety
5	**84228488**		*Oil*	Engine
6	**84328598**		*Fuel*	Pre-Cleaner
7	**84526251**		*Fuel*	
8	**84226258**		*Hydraulic*	Hydraulic Pump 113 l/min
9	**84226260**		*Hydraulic*	Hydraulic System (113 l/min pump)
10	**84248043**		*Hydraulic*	Hydraulic System (80 l/min pump)

T6000 T6050 Plus Version After 1/12/2009 Without Cab

#	Part Number	Qty	*Designation*	ⓘ
1	**87726675**	x2	*Cabin Air*	Heater & AC Conditioner
2	**87726699**		*Cabin Air*	Heater & AC Conditioner (Recirculation)
3	**87682990**		*Engine Air*	Main, with Pre-Cleaner
3	**87704248**		*Engine Air*	Main
4	**87683000**		*Engine Air*	Safety
5	**84228488**		*Oil*	Engine
6	**84328598**		*Fuel*	Pre-Cleaner
7	**84526251**		*Fuel*	
8	**84226263**		*Hydraulic*	Hydraulic Pump 113 l/min
9	**87708150**		*Hydraulic*	Hydraulic System (113 l/min pump)
10	**84248043**		*Hydraulic*	Hydraulic System (80 l/min pump)

T6000 T6010-T6020 Plus Version Before 1/12/2009 With Cab

#	Part Number	Qty	*Designation*	ⓘ
1	**87726675**	x2	*Cabin Air*	Heater & AC Conditioner
2	**87726699**		*Cabin Air*	Heater & AC Conditioner (Recirculation)
3	**84493217**		*Engine Air*	Main
3	**87704244**		*Engine Air*	Main, with Pre-Cleaner
4	**87682992**		*Engine Air*	Safety
5	**84228488**		*Oil*	Engine
6	**84328598**		*Fuel*	Pre-Cleaner
7	**84526251**		*Fuel*	
8	**84226258**		*Hydraulic*	Hydraulic System (80 l/min pump) with 24x24 transmission
9	**84226263**		*Hydraulic*	Hydraulic Pump 113 l/min
10	**84226260**		*Hydraulic*	Hydraulic System (113 l/min pump)
11	**84248043**		*Hydraulic*	Hydraulic System (80 l/min pump) with SPS transmission

T6000 T6010-T6020 Plus Version After 1/12/2009 With Cab

#	Part Number	Qty	*Designation*	ⓘ
1	**87726675**	x2	*Cabin Air*	Heater & AC Conditioner
2	**87726699**		*Cabin Air*	Heater & AC Conditioner (Recirculation)
3	**84493217**		*Engine Air*	Main
3	**87704244**		*Engine Air*	Main, with Pre-Cleaner
4	**87682992**		*Engine Air*	Safety
5	**84228488**		*Oil*	Engine
6	**84328598**		*Fuel*	Pre-Cleaner
7	**84526251**		*Fuel*	
8	**84226258**		*Hydraulic*	Hydraulic Pump 113 l/min
9	**87708150**		*Hydraulic*	Hydraulic System (113 l/min pump)
10	**84248043**		*Hydraulic*	Hydraulic System (80 l/min pump) with SPS transmission

T6000 T6030-T6050-T6070 Plus Version Before 1/12/2009 With Cab

#	Part Number	Qty	*Designation*	ⓘ
1	**87726675**	x2	*Cabin Air*	Heater & AC Conditioner
2	**87726699**		*Cabin Air*	Heater & AC Conditioner (Recirculation)
3	**87682990**		*Engine Air*	Main, with Pre-Cleaner
3	**87704248**		*Engine Air*	Main
4	**87683000**		*Engine Air*	Safety
5	**84228488**		*Oil*	Engine
6	**84328598**		*Fuel*	Pre-Cleaner
7	**84526251**		*Fuel*	
8	**84226258**		*Hydraulic*	Hydraulic System (80 l/min pump) with 24x24 transmission
9	**84226263**		*Hydraulic*	Hydraulic Pump 113 l/min
10	**84226260**		*Hydraulic*	Hydraulic System (113 l/min pump)
11	**84248043**		*Hydraulic*	Hydraulic System (80 l/min pump) with SPS transmission

T6000 T6030-T6050-T6070 Plus Version After 1/12/2009 With Cab

#	Part Number	Qty	*Designation*	ⓘ
1	**87726675**	x2	*Cabin Air*	Heater & AC Conditioner
2	**87726699**		*Cabin Air*	Heater & AC Conditioner (Recirculation)
3	**87682990**		*Engine Air*	Main, with Pre-Cleaner
3	**87704248**		*Engine Air*	Main
4	**87683000**		*Engine Air*	Safety
5	**84228488**		*Oil*	Engine
6	**84328598**		*Fuel*	Pre-Cleaner
7	**84526251**		*Fuel*	
8	**84226258**		*Hydraulic*	Hydraulic Pump 113 l/min
9	**87708150**		*Hydraulic*	Hydraulic System (113 l/min pump)
10	**84248043**		*Hydraulic*	Hydraulic System (80 l/min pump) with SPS transmission

T6000 T6020-T6040-T6060 Elite Version Before Serial Number 710158

#	Part Number	Qty	*Designation*	ⓘ
1	**87726675**	x2	*Cabin Air*	Heater & AC Conditioner
2	**87726699**		*Cabin Air*	Heater & AC Conditioner (Recirculation)
3	**84493217**		*Engine Air*	Main
3	**87704244**		*Engine Air*	Main, with Pre-Cleaner
4	**87682992**		*Engine Air*	Safety
5	**84228488**		*Oil*	Engine
6	**84328598**		*Fuel*	Pre-Cleaner
7	**84170818**		*Fuel*	Primary
8	**84412164**		*Fuel*	Secondary
9	**84226258**		*Hydraulic*	Hydraulic Pump 113 l/min with CL. 3 front axle
10	**84226263**		*Hydraulic*	Hydraulic Pump 113 l/min with CL. 4 front axle
11	**84226260**		*Hydraulic*	Hydraulic System (113 l/min pump)

T6000 T6020-T6040-T6060 Elite Version After Serial Number 710159

#	Part Number	Qty	*Designation*	ⓘ
1	**87726675**	x2	*Cabin Air*	Heater & AC Conditioner
2	**87726699**		*Cabin Air*	Heater & AC Conditioner (Recirculation)
3	**84493217**		*Engine Air*	Main
3	**87704244**		*Engine Air*	Main, with Pre-Cleaner
4	**87682992**		*Engine Air*	Safety
5	**84228488**		*Oil*	Engine
6	**84328598**		*Fuel*	Pre-Cleaner
7	**84278636**		*Fuel*	Primary
8	**84412164**		*Fuel*	Secondary
9	**84226258**		*Hydraulic*	Hydraulic Pump 113 l/min with CL. 3 front axle
10	**84226263**		*Hydraulic*	Hydraulic Pump 113 l/min with CL. 4 front axle
11	**84226260**		*Hydraulic*	Hydraulic System (113 l/min pump)

T6000 T6020-T6040-T6060 Elite Version After 1/12/2009

#	Part Number	Qty	*Designation*	ⓘ
2	**87726675**	x2	*Cabin Air*	Heater & AC Conditioner
3	**87726699**		*Cabin Air*	Heater & AC Conditioner (Recirculation)
4	**84493217**		*Engine Air*	Main
4	**87704244**		*Engine Air*	Main, with Pre-Cleaner
5	**87682992**		*Engine Air*	Safety
6	**84228488**		*Oil*	Engine
7	**84328598**		*Fuel*	Pre-Cleaner
9	**84278636**		*Fuel*	Primary
10	**84412164**		*Fuel*	Secondary
11	**84226258**		*Hydraulic*	Hydraulic Pump 113 l/min with CL. 4 front axle
12	**84226263**		*Hydraulic*	Hydraulic Pump 113 l/min with CL. 3 front axle
13	**87708150**		*Hydraulic*	Hydraulic System (113 l/min pump)

T6000 T6030-T6050-T6070 Elite Version Before Serial Number 710158

#	Part Number	Qty	*Designation*	ⓘ
1	**87726675**	x2	*Cabin Air*	Heater & AC Conditioner
2	**87726699**		*Cabin Air*	Heater & AC Conditioner (Recirculation)
3	**87682990**		*Engine Air*	Main, with Pre-Cleaner
3	**87704248**		*Engine Air*	Main
4	**87683000**		*Engine Air*	Safety
5	**84228488**		*Oil*	Engine
6	**84328598**		*Fuel*	Pre-Cleaner
7	**84170818**		*Fuel*	Primary
8	**84412164**		*Fuel*	Secondary
9	**84226258**		*Hydraulic*	Hydraulic Pump 113 l/min with CL. 3 front axle
10	**84226263**		*Hydraulic*	Hydraulic Pump 113 l/min with CL. 4 front axle
11	**84226260**		*Hydraulic*	Hydraulic System (113 l/min pump)

T6000 T6030-T6050-T6070 Elite Version After Serial Number 710159

#	Part Number	Qty	*Designation*	ⓘ
1	**87726675**	x2	*Cabin Air*	Heater & AC Conditioner
2	**87726699**		*Cabin Air*	Heater & AC Conditioner (Recirculation)
3	**87682990**		*Engine Air*	Main, with Pre-Cleaner
3	**87704248**		*Engine Air*	Main
4	**87683000**		*Engine Air*	Safety
5	**84228488**		*Oil*	Engine
6	**84328598**		*Fuel*	Pre-Cleaner
7	**84278636**		*Fuel*	Primary
8	**84412164**		*Fuel*	Secondary
9	**84226258**		*Hydraulic*	Hydraulic Pump 113 l/min with CL. 3 front axle
10	**84226263**		*Hydraulic*	Hydraulic Pump 113 l/min with CL. 4 front axle
11	**84226260**		*Hydraulic*	Hydraulic System (113 l/min pump)

T6000 T6030-T6050-T6070 Elite Version After 1/12/2009

#	Part Number	Qty	*Designation*	ⓘ
1	**87726675**	x2	*Cabin Air*	Heater & AC Conditioner
2	**87726699**		*Cabin Air*	Heater & AC Conditioner (Recirculation)
3	**87682990**		*Engine Air*	Main, with Pre-Cleaner
3	**87704248**		*Engine Air*	Main
4	**87683000**		*Engine Air*	Safety
5	**84228488**		*Oil*	Engine
6	**84328598**		*Fuel*	Pre-Cleaner
7	**84278636**		*Fuel*	Primary
8	**84412164**		*Fuel*	Secondary
9	**84226258**		*Hydraulic*	Hydraulic Pump 113 l/min with CL. 4 front axle
10	**84226263**		*Hydraulic*	Hydraulic Pump 113 l/min with CL. 3 front axle
11	**87708150**		*Hydraulic*	Hydraulic System (113 l/min pump)

M/60 8160-8260

#	Part Number	Qty	*Designation*	ⓘ
1	**47365582**		*Hydraulic*	Hydraulic System
2	**5196842**	x2	*Cabin Air*	Air conditioning
2	**82012057**	x2	*Cabin Air*	Heating
3	**82033107**	x2	*Cabin Air*	Foam
4	**81879134**		*Oil*	Engine oil
5	**84248043**		*Hydraulic*	Hydraulic Pump, Primary
6	**84226258**		*Hydraulic*	Hydraulic Pump, Secondary
7	**82008600**		*Engine Air*	Main
7	**87394887**		*Engine Air*	Main, with Pre-Cleaner
8	**82008601**		*Engine Air*	Safety
8	**82014794**		*Engine Air*	Safety, with Pre-Cleaner
9	**87802332**		*Fuel*	Fuel/Water Separator
9	**87840591**		*Fuel*	Fuel/Water Separator
10	**87840590**		*Fuel*	

M/60 8360-8560

#	Part Number	Qty	*Designation*	ⓘ
1	**47365582**		*Hydraulic*	Hydraulic System
2	**5196842**	x2	*Cabin Air*	Air conditioning
2	**82012057**	x2	*Cabin Air*	Heating
3	**82033107**	x2	*Cabin Air*	Foam
4	**81879134**		*Oil*	Engine oil
5	**84248043**		*Hydraulic*	Hydraulic Pump, Primary
6	**84226258**		*Hydraulic*	Hydraulic Pump, Secondary
7	**82008606**		*Engine Air*	Main
7	**87394887**		*Engine Air*	Main, with Pre-Cleaner
8	**82008607**		*Engine Air*	Safety
9	**87802332**		*Fuel*	Fuel/Water Separator
9	**87840591**		*Fuel*	Fuel/Water Separator
10	**87840590**		*Fuel*	

M/60 M100-M115

#	Part Number	Qty	*Designation*	ⓘ
1	**47365582**		*Hydraulic*	Hydraulic System
2	**5196842**	x2	*Cabin Air*	Air conditioning
2	**82012057**	x2	*Cabin Air*	Heating
3	**82033107**	x2	*Cabin Air*	Foam
4	**81879134**		*Oil*	Engine oil
5	**84248043**		*Hydraulic*	Hydraulic Pump, Primary
6	**84226258**		*Hydraulic*	Hydraulic Pump, Secondary
7	**82008600**		*Engine Air*	Main
7	**87394887**		*Engine Air*	Main, with Pre-Cleaner
8	**82008601**		*Engine Air*	Safety
8	**82014794**		*Engine Air*	Safety, with Pre-Cleaner
9	**87802332**		*Fuel*	Fuel/Water Separator
9	**87840591**		*Fuel*	Fuel/Water Separator
10	**87840590**		*Fuel*	

#	Part Number	Qty	*Designation*	ⓘ
1	**47365582**		*Hydraulic*	Hydraulic System
2	**5196842**	x2	*Cabin Air*	Air conditioning
2	**82012057**	x2	*Cabin Air*	Heating
3	**82033107**	x2	*Cabin Air*	Foam
4	**81879134**		*Oil*	Engine oil
5	**84248043**		*Hydraulic*	Hydraulic Pump, Primary
6	**84226258**		*Hydraulic*	Hydraulic Pump, Secondary
7	**82008606**		*Engine Air*	Air Cleaner, Main
7	**87394887**		*Engine Air*	Main, with Pre-Cleaner
8	**82008607**		*Engine Air*	Safety
9	**87802332**		*Fuel*	Fuel/Water Separator
9	**87840591**		*Fuel*	Fuel/Water Separator
10	**87840590**		*Fuel*	

TM1 TM115

#	Part Number	Qty	*Designation*	ⓘ
1	**87840590**		*Fuel*	
2	**87802332**		*Fuel*	Water separator
3	**81879134**		*Oil*	Engine oil
4	**47372276**		*Engine Air*	Main
4	**87394887**		*Engine Air*	Main, with Pre-Cleaner
5	**82008601**		*Engine Air*	Safety
5	**82014794**		*Engine Air*	Safety, with Pre-Cleaner
6	**84248043**		*Hydraulic*	Hydraulic pump - Primary
7	**84226258**		*Hydraulic*	Hydraulic pump - Secondary
8	**47365582**		*Hydraulic*	Hydraulic pump, with 20x16 transmission
9	**82018373**	x2	*Cabin Air*	Roof
10	**87385322**	x2	*Cabin Air*	Air conditioning
11	**82033107**	x2	*Cabin Air*	Foam

TM1 TM125

#	Part Number	Qty	*Designation*	ⓘ
1	**87840590**		*Fuel*	
2	**87802332**		*Fuel*	Water separator
3	**81879134**		*Oil*	Engine oil
4	**87394880**		*Engine Air*	Main
4	**87394887**		*Engine Air*	Main, with Pre-Cleaner
5	**82034441**		*Engine Air*	Safety
6	**84248043**		*Hydraulic*	Hydraulic pump - Primary
7	**84226258**		*Hydraulic*	Hydraulic pump - Secondary
8	**47365582**		*Hydraulic*	Hydraulic pump, with 20x16 transmission
9	**82018373**	x2	*Cabin Air*	Roof
10	**87385322**	x2	*Cabin Air*	Air conditioning
11	**82033107**	x2	*Cabin Air*	Foam

TM1 TM135 - TM150 - TM165

#	Part Number	Qty	*Designation*	ⓘ
1	**87840590**		*Fuel*	
2	**87802332**		*Fuel*	Water separator
3	**81879134**		*Oil*	Engine oil
4	**87394880**		*Engine Air*	Main
4	**87394887**		*Engine Air*	Main, with Pre-Cleaner
5	**82034441**		*Engine Air*	Safety
6	**84248043**		*Hydraulic*	Hydraulic pump - Primary
7	**84226258**		*Hydraulic*	Hydraulic pump - Secondary
8	**82018373**	x2	*Cabin Air*	Roof
9	**87385322**	x2	*Cabin Air*	Air conditioning
10	**82033107**	x2	*Cabin Air*	Foam

TM2 TM120 - TM130 - TM140 - TM155 Before Serial Number ACM218235

#	Part Number	Qty	*Designation*	ⓘ
1	**87802728**		*Fuel*	Fuel system with one filter
2	**87802332**		*Fuel*	Secondary, for fuel system with two filters
2	**87840590**		*Fuel*	Primary, for fuel system with two filters
3	**84328598**		*Fuel*	Pre-Cleaner
4	**81879134**		*Oil*	Engine oil
5	**87394880**		*Engine Air*	Main
5	**87394887**		*Engine Air*	Main, with Pre-Cleaner
5	**87682990**		*Engine Air*	Main, for fine dust
6	**82034441**		*Engine Air*	Safety
6	**87683000**		*Engine Air*	Safety, for fine dust
7	**84248043**		*Hydraulic*	Hydraulic pump
8	**47365582**		*Hydraulic*	Hydraulic pump, with 20x16 transmission
9	**82018373**	x2	*Cabin Air*	Roof
10	**87385322**	x2	*Cabin Air*	Air conditioning
11	**82033107**	x2	*Cabin Air*	Foam

TM2 TM120 - TM130 - TM140 - TM155 After Serial Number ACM218236

#	Part Number	Qty	*Designation*	ⓘ
1	**87802728**		*Fuel*	Fuel system with one filter
2	**87803441**		*Fuel*	Primary, for fuel system with two filters
2	**87803444**		*Fuel*	Secondary, for fuel system with two filters
3	**84328598**		*Fuel*	Pre-Cleaner
4	**81879134**		*Oil*	Engine oil
5	**87394880**		*Engine Air*	Main
5	**87394887**		*Engine Air*	Main, with Pre-Cleaner
5	**87682990**		*Engine Air*	Main, for fine dust
6	**82034441**		*Engine Air*	Safety
6	**87683000**		*Engine Air*	Safety, for fine dust
7	**84248043**		*Hydraulic*	Hydraulic pump
8	**47365582**		*Hydraulic*	Hydraulic pump, with 20x16 transmission
9	**82018373**	x2	*Cabin Air*	Roof
10	**87385322**	x2	*Cabin Air*	Air conditioning
11	**82033107**	x2	*Cabin Air*	Foam

T6000 RCPC T6030 RCPC-T6050 RCPC-T6070 RCPC-T6080 RCPC-T6090 RCPC Before Serial Number 710158

#	Part Number	Qty	*Designation*	ⓘ
1	**87726675**	x2	*Cabin Air*	Heater & AC Conditioner
2	**87726699**		*Cabin Air*	Heater & AC Conditioner (Recirculation)
3	**87682990**		*Engine Air*	Air Cleaner with Pre-Cleaner, Main, with roof with low profile
3	**87704248**		*Engine Air*	Air Cleaner with Pre-Cleaner, Main, with roof with high profile
4	**87683000**		*Engine Air*	Air Cleaner with Pre-Cleaner, Safety
5	**84228488**		*Oil*	Engine
6	**84328598**		*Fuel*	Pre-Cleaner
7	**84170818**		*Fuel*	Primary, with water separator
8	**84167233**		*Fuel*	Pre-filter
8	**84412164**		*Fuel*	Secondary
9	**84226263**		*Hydraulic*	Hydraulic Pump
10	**87708150**		*Hydraulic*	Hydraulic System

T6000 RCPC T6030 RCPC-T6050 RCPC-T6070 RCPC-T6080 RCPC-T6090 RCPC After Serial Number 710159

#	Part Number	Qty	*Designation*	ⓘ
1	**87726675**	x2	*Cabin Air*	Heater & AC Conditioner
2	**87726699**		*Cabin Air*	Heater & AC Conditioner (Recirculation)
3	**87682990**		*Engine Air*	Air Cleaner with Pre-Cleaner, Main
3	**87704248**		*Engine Air*	Air Cleaner with Pre-Cleaner, Main, with roof with high profile
4	**87683000**		*Engine Air*	Air Cleaner with Pre-Cleaner, Safety
5	**84228488**		*Oil*	Engine
6	**84328598**		*Fuel*	Pre-Cleaner
7	**84278636**		*Fuel*	Primary
8	**84167233**		*Fuel*	Pre-filter
8	**84412164**		*Fuel*	Secondary
9	**84226263**		*Hydraulic*	Hydraulic Pump
10	**87708150**		*Hydraulic*	Hydraulic System

T6000 RCPC T6030E-T6050E-T6070E-T6080E Before Serial Number 710158

#	Part Number	Qty	*Designation*	ⓘ
1	**87726675**	x2	*Cabin Air*	Heater & AC Conditioner
2	**87726699**		*Cabin Air*	Heater & AC Conditioner (Recirculation)
3	**87682990**		*Engine Air*	Air Cleaner with Pre-Cleaner for Roof with Low Profile, Main
3	**87704248**		*Engine Air*	Dry Air, Main
4			*Engine Air*	Air Cleaner with Pre-Cleaner for Roof with Low Profile, Safety
4	**87683000**		*Engine Air*	Dry Air, Safety
5	**84228488**		*Oil*	Engine
6	**84328598**		*Fuel*	Pre-Cleaner
7	**84170818**		*Fuel*	Primary
8	**84412164**		*Fuel*	Secondary
9	**84226263**		*Hydraulic*	Hydraulic Pump
10	**47617638**		*Hydraulic*	Hydraulic System

T6000 RCPC T6030E-T6050E-T6070E-T6080E After Serial Number 710159

#	Part Number	Qty	*Designation*	ⓘ
1	**87726675**	x2	*Cabin Air*	Heater & AC Conditioner
2	**87726699**		*Cabin Air*	Heater & AC Conditioner (Recirculation)
3	**87682990**		*Engine Air*	Air Cleaner with Pre-Cleaner for Roof with Low Profile, Main
3	**87704248**		*Engine Air*	Dry Air, Main
4			*Engine Air*	Air Cleaner with Pre-Cleaner for Roof with Low Profile, Safety
4	**87683000**		*Engine Air*	Dry Air, Safety
5	**84228488**		*Oil*	Engine
6	**84328598**		*Fuel*	Pre-Cleaner
7	**84278636**		*Fuel*	Primary
8	**84412164**		*Fuel*	Secondary
9	**84226263**		*Hydraulic*	Hydraulic Pump
10	**47617638**		*Hydraulic*	Hydraulic System

T6.XXX T6.120-T6.140

#	Part Number	Qty	*Designation*	ⓘ
1	**84228488**		*Oil*	Engine
2	**84226258**		*Hydraulic*	Hydraulic System (80 l/min pump)
3	**84248043**		*Hydraulic*	Hydraulic Pump 80 l/min
4	**84328598**		*Fuel*	Pre-Cleaner
5	**87708150**		*Hydraulic*	Hydraulic Pump 113 l/min
6	**87726675**	x2	*Cabin Air*	Heater & AC Conditioner for Roof with High Profile
6	**87726695**	x2	*Cabin Air*	Heater & AC Conditioner
7	**87726699**		*Cabin Air*	Heater & AC Conditioner (Recirculation)
8	**84493217**		*Engine Air*	Air Cleaner, Main
8	**87704244**		*Engine Air*	Air Cleaner with Pre-Cleaner, Main
9	**87682992**		*Engine Air*	Air Cleaner, Safety
9	**87682992**		*Engine Air*	Air Cleaner with Pre-Cleaner, Safety
10	**84278636**		*Fuel*	Primary
11	**84412164**		*Fuel*	Secondary

T6.XXX T6.155-T6.165-T6.175

#	Part Number	Qty	*Designation*	ⓘ
1	**84228488**		*Oil*	Engine
2	**84226258**		*Hydraulic*	Hydraulic System (80 l/min pump)
3	**84248043**		*Hydraulic*	Hydraulic Pump 80 l/min
4	**84328598**		*Fuel*	Pre-Cleaner
5	**87708150**		*Hydraulic*	Hydraulic Pump 113 l/min
6	**87726675**	x2	*Cabin Air*	Heater & AC Conditioner for Roof with High Profile
6	**87726695**	x2	*Cabin Air*	Heater & AC Conditioner
7	**87726699**		*Cabin Air*	Heater & AC Conditioner (Recirculation)
8	**87682990**		*Engine Air*	Air Cleaner with Pre-Cleaner, Main
8	**87704248**		*Engine Air*	Air Cleaner, Main
9	**87683000**		*Engine Air*	Air Cleaner, Safety
9	**87683000**		*Engine Air*	Air Cleaner with Pre-Cleaner, Safety
10	**84278636**		*Fuel*	Primary
11	**84412164**		*Fuel*	Secondary

TM TM175 - TM190 Before Serial Number ACM218235

#	Part Number	Qty	*Designation*	ⓘ
1	**87802728**		*Fuel*	Fuel system with one filter
2	**87802332**		*Fuel*	Secondary, for fuel system with two filters
2	**87840590**		*Fuel*	Primary, for fuel system with two filters
3	**84328598**		*Fuel*	Pre-Cleaner
4	**81879134**		*Oil*	Engine oil
5	**82034433**		*Engine Air*	Main
6	**82034435**		*Engine Air*	Safety
7	**84226260**		*Hydraulic*	Hydraulic system
8	**84226263**		*Hydraulic*	Hydraulic pump
9	**9821387**		*Hydraulic*	Charge Pump
10	**82018373**	x2	*Cabin Air*	Roof
11	**87385322**	x2	*Cabin Air*	Air conditioning
12	**82033107**	x2	*Cabin Air*	Foam

TM TM175 - TM190 After Serial Number ACM218236

#	Part Number	Qty	*Designation*	ⓘ
1	**87802728**		*Fuel*	Fuel system with one filter
2	**87803441**		*Fuel*	Primary, for fuel system with two filters
2	**87803444**		*Fuel*	Secondary, for fuel system with two filters
3	**84328598**		*Fuel*	Pre-Cleaner
4	**81879134**		*Oil*	Engine oil
5	**82034433**		*Engine Air*	Main
6	**82034435**		*Engine Air*	Safety
7	**84226260**		*Hydraulic*	Hydraulic system
8	**84226263**		*Hydraulic*	Hydraulic pump
9	**9821387**		*Hydraulic*	Charge Pump
10	**82018373**	x2	*Cabin Air*	Roof
11	**87385322**	x2	*Cabin Air*	Air conditioning
12	**82033107**	x2	*Cabin Air*	Foam

TVT TVT135 - TVT 155 - TVT170 - TVT190 - TVT 195

#	Part Number	Qty	*Designation*	ⓘ
1	**1-34-584-630**	*Cabin Air*	Heater	
2	**1-34-684-036**	*Cabin Air*	Cab Air Roof	
3	**84269166**	*Fuel*	Primary	
4	**84269165**	*Fuel*	Secondary	
5	**162000190700**	*Engine Air*	Main	
6	**162000190710**	*Engine Air*	Safety	
7	**47522804**	*Hydraulic*	Steering	
8	**192310280011**	*Hydraulic*	Transmission suction	
9	**47436570**	*Hydraulic*	Transmission box	
10	**84469093**	*Hydraulic*	Hydraulic pump	
11	**84287923**	*Oil*	Engine	

T7500 T7510 - T7520 - T7530 - T7540 - T7550

#	Part Number	Qty	*Designation*	ⓘ
1	**84237579**		*Hydraulic*	Hydraulic pump
2	**1-34-584-630**		*Cabin Air*	Heater
3	**84287923**		*Oil*	Engine
4	**84269164**		*Fuel*	Primary
5	**84269163**		*Fuel*	Secondary
6	**162000190700**		*Engine Air*	Main
7	**162000190710**		*Engine Air*	Safety
8	**47522804**		*Hydraulic*	Steering
9	**192310280011**		*Hydraulic*	Transmission suction
10	**47436570**		*Hydraulic*	Transmission box
11	**87726675**		*Cabin Air*	A/C Conditioner
12	**87726699**		*Cabin Air*	A/C Conditioner

T7000 T7030-T7040-T7050-T7060 Before Serial Number 710158

#	Part Number	Qty	*Designation*	ⓘ
1	**84228488**		*Oil*	Engine
2	**84226260**		*Hydraulic*	Hydraulic System (120 l/min pump)
2	**84476646**		*Hydraulic*	Hydraulic System (150 l/min pump)
3	**84226263**		*Hydraulic*	Hydraulic Pump 120 l/min & 150 l/min
4	**87708150**		*Hydraulic*	Hydraulic System
5	**87517154**		*Engine Air*	Main
6	**87517153**		*Engine Air*	Safety
7	**84170818**		*Fuel*	Primary
8	**84412164**		*Fuel*	Secondary
9	**87726675**	x2	*Cabin Air*	A/C Conditioner & Heater
10	**87726699**		*Cabin Air*	A/C Conditioner & Heater (Recirculation)
11	**84328598**		*Fuel*	Pre-Cleaner

T7000 T7030-T7040-T7050-T7060 After Serial Number 710159

#	Part Number	Qty	*Designation*	ⓘ
1	**84228488**		*Oil*	Engine
2	**84226260**		*Hydraulic*	Hydraulic System (120 l/min pump)
2	**84476646**		*Hydraulic*	Hydraulic System (150 l/min pump)
3	**84226263**		*Hydraulic*	Hydraulic Pump 120 l/min & 150 l/min
4	**87708150**		*Hydraulic*	Hydraulic System
5	**87517154**		*Engine Air*	Main
6	**87517153**		*Engine Air*	Safety
7	**84278636**		*Fuel*	Primary
8	**84412164**		*Fuel*	Secondary
9	**87726675**	x2	*Cabin Air*	A/C Conditioner & Heater
10	**87726699**		*Cabin Air*	A/C Conditioner & Heater (Recirculation)
11	**84328598**		*Fuel*	Pre-Cleaner

T7000SW T7030 -T7040 -T7050 -T7060 Before Serial Number 710158

#	Part Number	Qty	*Designation*	ⓘ
1	**84228488**		*Oil*	Engine
2	**84226263**		*Hydraulic*	Hydraulic Pump 120 l/min & 150 l/min
3	**87708150**		*Hydraulic*	Hydraulic System
4	**87517154**		*Engine Air*	Main
5	**87517153**		*Engine Air*	Safety
6	**84170818**		*Fuel*	Primary
7	**84412164**		*Fuel*	Secondary
8	**87726675**	x2	*Cabin Air*	A/C Conditioner & Heater
9	**87726699**		*Cabin Air*	A/C Conditioner & Heater (Recirculation)
10	**84328598**		*Fuel*	Pre-Cleaner

T7000SW T7030 -T7040 -T7050 -T7060 After Serial Number 710159

#	Part Number	Qty	*Designation*	ⓘ
1	**84228488**		*Oil*	Engine
2	**84226263**		*Hydraulic*	Hydraulic Pump 120 l/min & 150 l/min
3	**87708150**		*Hydraulic*	Hydraulic System
4	**87517154**		*Engine Air*	Main
5	**87517153**		*Engine Air*	Safety
6	**84278636**		*Fuel*	Primary
7	**84412164**		*Fuel*	Secondary
8	**87726675**	x2	*Cabin Air*	A/C Conditioner & Heater
9	**87726699**		*Cabin Air*	A/C Conditioner & Heater (Recirculation)
10	**84328598**		*Fuel*	Pre-Cleaner

T7000AC T7030 -T7040 -T7050 -TV7070 Before Serial Number 710158

#	Part Number	Qty	*Designation*	ⓘ
1	**84228488**		*Oil*	Engine
2	**87726675**	x2	*Cabin Air*	A/C Conditioner & Heater
3	**87726699**		*Cabin Air*	A/C Conditioner & Heater (Recirculation)
4	**84328598**		*Fuel*	Pre-Cleaner
5	**87517154**		*Engine Air*	Main
6	**87517153**		*Engine Air*	Safety
7	**84324774**		*Hydraulic*	Charge Pump
8	**87588814**		*Hydraulic*	Vane Pump
9	**87708150**		*Hydraulic*	Hydraulic System
10	**84170818**		*Fuel*	Primary
11	**84412164**		*Fuel*	Secondary

T7000AC T7030 -T7040 -T7050 -TV7070 After Serial Number 710159

#	Part Number	Qty	*Designation*	ⓘ
1	**84228488**		*Oil*	Engine
2	**87726675**	x2	*Cabin Air*	A/C Conditioner & Heater
3	**87726699**		*Cabin Air*	A/C Conditioner & Heater (Recirculation)
4	**84328598**		*Fuel*	Pre-Cleaner
5	**87517154**		*Engine Air*	Main
6	**87517153**		*Engine Air*	Safety
7	**84324774**		*Hydraulic*	Charge Pump
8	**87588814**		*Hydraulic*	Vane Pump
9	**87708150**		*Hydraulic*	Suction
10	**84278636**		*Fuel*	Primary
11	**84412164**		*Fuel*	Secondary

T7000AC T7030 -T7040 -T7050 -TV7070 After Date (14/09/2010)

#	Part Number	Qty	*Designation*	ⓘ
1	**84228488**		*Oil*	Engine
2	**87726675**	x2	*Cabin Air*	A/C Conditioner & Heater
3	**87726699**		*Cabin Air*	A/C Conditioner & Heater (Recirculation)
4	**84328598**		*Fuel*	Pre-Cleaner
5	**84417139**		*Hydraulic*	Charge Pump
6	**87517154**		*Engine Air*	Main
7	**87517153**		*Engine Air*	Safety
9	**87588814**		*Hydraulic*	Vane Pump
9	**87708150**		*Hydraulic*	Suction
10	**84278636**		*Fuel*	Primary
11	**84412164**		*Fuel*	Secondary

T7.XXXAC T7.220 AC-T7.235 AC-T7.250 AC-T7.270 AC

#	Part Number	Qty	*Designation*	ⓘ
1	**84228488**		*Oil*	Engine
2	**84278636**		*Fuel*	Primary
3	**84412164**		*Fuel*	Secondary
4	**84328598**		*Fuel*	Pre-Cleaner
5	**84417139**		*Hydraulic*	Charge Pump
6	**87517154**		*Engine Air*	Main
7	**87517153**		*Engine Air*	Safety
8	**87588814**		*Hydraulic*	Vane Pump
9	**87708150**		*Hydraulic*	Hydraulic System
10	**87718479**		*Fuel*	Bio Diesel
11	**87726675**	x2	*Cabin Air*	A/C Conditioner & Heater
12	**87726699**		*Cabin Air*	A/C Conditioner & Heater (Recirculation)

T7SWB T7.170 RCPC-T7.185 RCPC-T7.200 RCPC-T7.210 RCPC

#	Part Number	Qty	*Designation*	ⓘ
1	**84228488**		*Oil*	Engine
2	**84226258**		*Hydraulic*	Hydraulic Pump 120 L/Min
3	**87682990**		*Engine Air*	Main
4	**87683000**		*Engine Air*	Safety
5	**84278636**		*Fuel*	Primary
6	**84412164**		*Fuel*	Secondary
7	**84328598**		*Fuel*	Pre-Cleaner
8	**87309516**		*Cabin Air*	Carbon
9	**87708150**		*Hydraulic*	Hydraulic System
10	**87726675**	x2	*Cabin Air*	A/C Conditioner & Heater
11	**87726699**		*Cabin Air*	A/C Conditioner & Heater (Recirculation)

T7SWB T7.170-T7.185-T7.200-T7.210

#	Part Number	Qty	*Designation*	ⓘ
1	**84228488**		*Oil*	Engine
2	**87682990**		*Engine Air*	Main
3	**87683000**		*Engine Air*	Safety
4	**84278636**		*Fuel*	Primary
5	**84412164**		*Fuel*	Secondary
6	**84328598**		*Fuel*	Pre-Cleaner
7	**84371476**		*Hydraulic*	Resounding
8	**84417139**		*Hydraulic*	Charge Pump
9	**87309516**		*Cabin Air*	Carbon
10	**87588814**		*Hydraulic*	Vane Pump
11	**87708150**		*Hydraulic*	Hydraulic System
12	**87726675**	x2	*Cabin Air*	A/C Conditioner & Heater
13	**87726699**		*Cabin Air*	A/C Conditioner & Heater (Recirculation)

T7LWB T7.250 PC-T7.250 PC SW-T7.260 PC

#	Part Number	Qty	*Designation*	ⓘ
1	**84228488**		*Oil*	Engine
2	**84226258**		*Hydraulic*	Hydraulic Pump 120 L/Min
2	**84226263**		*Hydraulic*	Hydraulic Pump 150 L/Min
3	**84278636**		*Fuel*	Primary
4	**84412164**		*Fuel*	Secondary
5	**84328598**		*Fuel*	Pre-Cleaner
6	**87708150**		*Hydraulic*	Hydraulic System
7	**87517154**		*Engine Air*	Main
8	**87517153**		*Engine Air*	Safety
9	**84566248**		*Fuel*	Bio Diesel
10	**87726675**	x2	*Cabin Air*	A/C Conditioner & Heater
11	**87726699**		*Cabin Air*	A/C Conditioner & Heater (Recirculation)
12	**87309516**		*Cabin Air*	Carbon

#	Part Number	Qty	*Designation*	ⓘ
1	**369842A1**		*Fuel*	Separator
2	**84229397**		*Oil*	Engine
3	**84476807**		*Fuel*	Primary
4	**84557099**		*Fuel*	Secondary
5	**87267363**		*Cabin Air*	A/C Condition (Air), Charcoal
5	**87684088**		*Cabin Air*	A/C Condition (Air)
6	**87413508**	x2	*Cabin Air*	A/C Condition (Ducts)
7	**84487937**		*Hydraulic*	Hydraulic System
8	**84226258**		*Hydraulic*	Charge Pump
9	**87338668**		*Engine Air*	Primary
10	**451526A1**		*Engine Air*	Secondary

T8000 T8010-T8020-T8030-T8040-T8050 Before Serial Number Z8RW04134

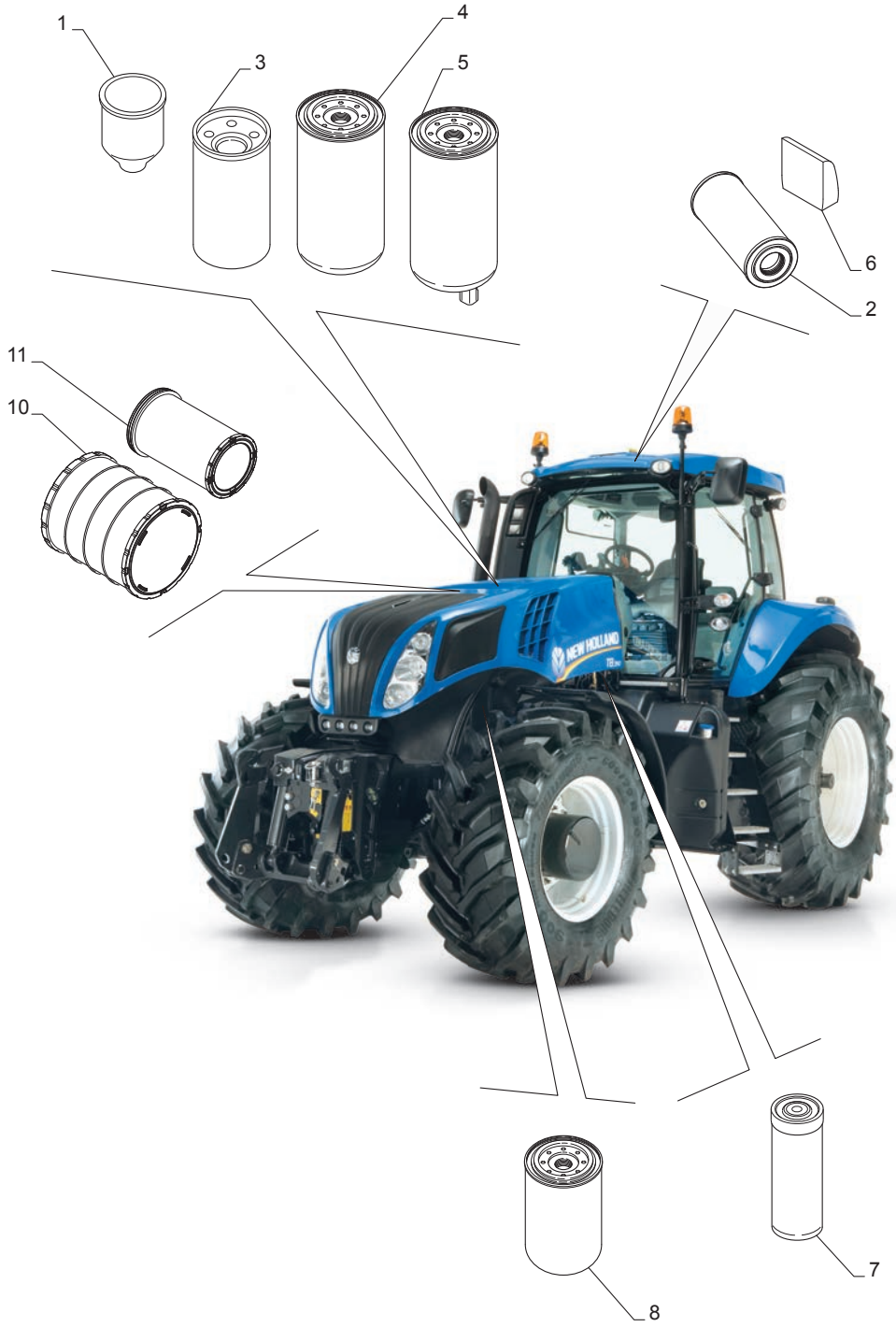

#	Part Number	Qty	*Designation*	ⓘ
1	**369842A1**		*Fuel*	Separator
2	**87267363**		*Cabin Air*	A/C Condition (Charcoal)
2	**87684088**		*Cabin Air*	A/C Condition
3	**84301243**		*Oil*	Engine
4	**87360572**		*Fuel*	Primary
5	**84477359**		*Fuel*	Secondary
6	**87413508**	x2	*Cabin Air*	A/C Condition (Ducts)
7	**84487937**		*Hydraulic*	Hydraulic System
8	**84226258**		*Hydraulic*	Charge Pump
9	**84476647**		*Engine Air*	Secondary
10	**87408704**		*Engine Air*	Primary

T8000 T8010-T8020-T8030-T8040-T8050 After Serial Number Z8RW04135

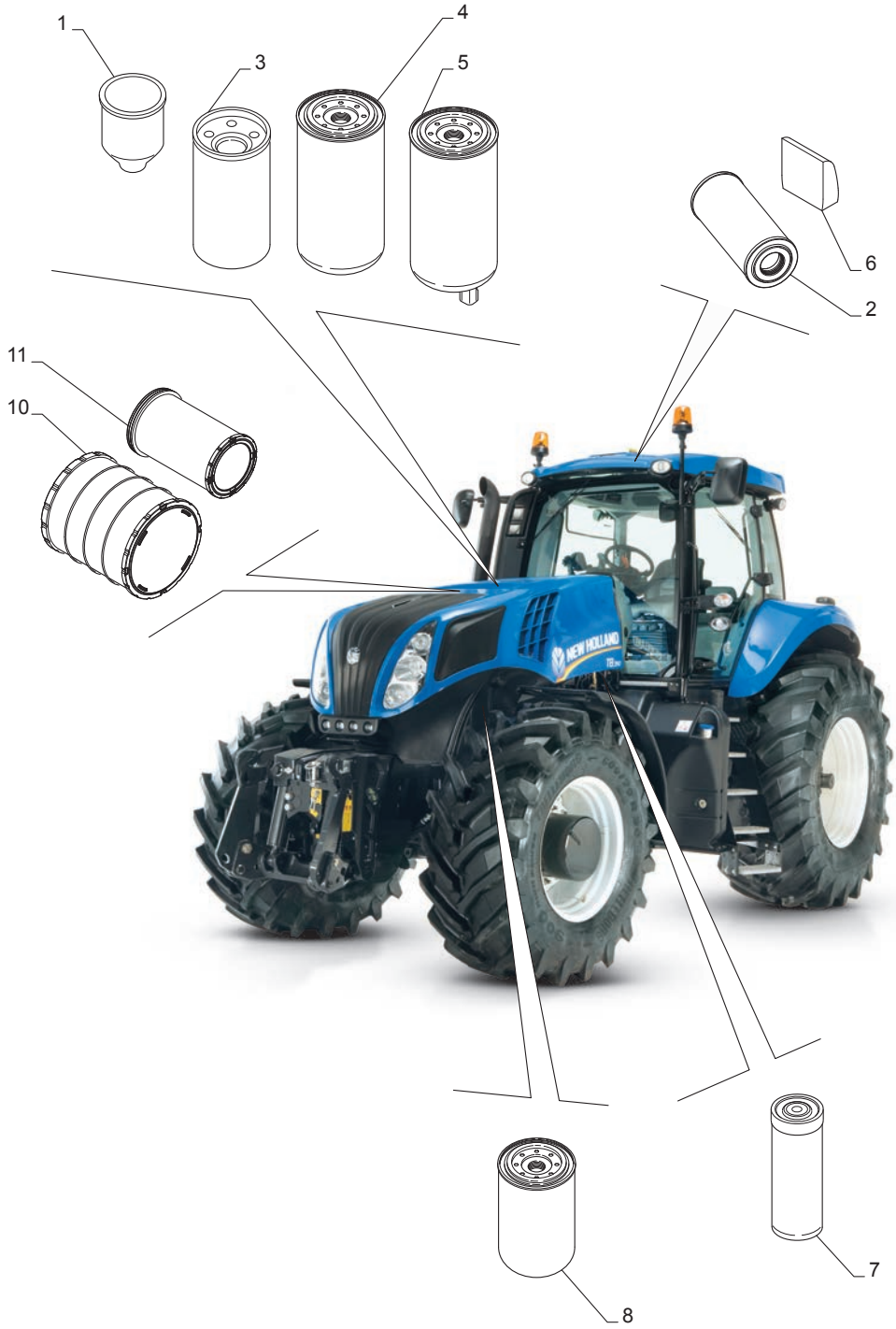

#	Part Number	Qty	*Designation*	ⓘ
1	**369842A1**		*Fuel*	Separator
2	**87267363**		*Cabin Air*	A/C Condition (Charcoal)
2	**87684088**		*Cabin Air*	A/C Condition
3	**84301243**		*Oil*	Engine
4	**87360572**		*Fuel*	Primary
5	**84477359**		*Fuel*	Secondary
6	**87413508**	x2	*Cabin Air*	A/C Condition (Ducts)
7	**84487937**		*Hydraulic*	Hydraulic System
8	**84226258**		*Hydraulic*	Charge Pump
9	**87741569**		*Engine Air*	Secondary
10	**87741560**		*Engine Air*	Primary

T8.XXX T8.275-T8.300-T8.330-T8.360-T8.390

#	Part Number	Qty	*Designation*	ⓘ
1	**84487937**		*Hydraulic*	Sandard, Mega & High Flow Capacity POWERSHIFT
2	**87413508**	x2	*Cabin Air*	A/C Condition (Ducts)
3	**369842A1**		*Fuel*	Separator
4	**84565867**		*Oil*	Engine
5	**84191182**		*Engine Air*	Primary
6	**87356547**		*Engine Air*	Secondary
7	**84202794**		*Hydraulic*	Regulated Valve
8	**84240234**		*Hydraulic*	Sandard, High Flow & Mega Flow Capacity CVT
9	**84348883**		*Fuel*	with WIF sensor
10	**84356072**		*Hydraulic*	Charge Pump
11	**84383316**		*Hydraulic*	Trailer Brake
12	**87267363**		*Cabin Air*	A/C Condition (Air), Charcoal
12	**87684088**		*Cabin Air*	A/C Condition (Air)
13	**5801439820**		*Fuel*	Cartridge

TC AL59

#	Part Number	Qty	*Designation*	ⓘ
1	**87840136**		*Fuel*	
2	**9501200**		*Fuel*	Tank strainer
3	**87519301**		*Fuel*	Tank
4	**84072431**		*Engine Air*	Main
5	**84072430**		*Engine Air*	Safety
6	**81879134**		*Oil*	Engine oil
7	**89594075**		*Cabin Air*	Heating
8	**922214**	x2	*Cabin Air*	Roof
9	**9811443**		*Hydraulic*	Oil tank
10	**9814477**		*Hydraulic*	Oil tank
11	**84031924**		*Hydraulic*	Oil tank
12	**84031880**		*Hydraulic*	Hydrostatic pump

TC TC52 - TC54 - TC56

#	Part Number	Qty	*Designation*	ⓘ
1	**87800220**		*Fuel*	Low pressure system
2	**9501200**		*Fuel*	Tank strainer
3	**87519301**		*Fuel*	Tank
4	**84072431**		*Engine Air*	Main
5	**84072430**		*Engine Air*	Safety
6	**81879134**		*Oil*	Engine oil
7	**89594075**		*Cabin Air*	Heating
8	**922214**	x2	*Cabin Air*	Roof
9	**9811443**		*Hydraulic*	Oil tank
10	**9814477**		*Hydraulic*	Oil tank
11	**84031924**		*Hydraulic*	Oil tank
12	**84031880**		*Hydraulic*	Hydrostatic pump
13	**87801285**		*Fuel*	High pressure system

TC5000 TC5040 - TC5050 - TC5060 - TC5070 - TC5080

#	Part Number	Qty	*Designation*	ⓘ
1	**9501200**		*Fuel*	Tank strainer
2	**87519301**		*Fuel*	
3	**84072431**		*Engine Air*	Main
4	**84072430**		*Engine Air*	Safety
5	**2852526**		*Oil*	Engine oil
6	**89594075**		*Cabin Air*	Heating
7	**922214**	x2	*Cabin Air*	Roof
8	**9811443**		*Hydraulic*	Tank Filter
9	**9814477**		*Hydraulic*	Tank Filter
10	**84031924**		*Hydraulic*	Oil tank

CSX CSX7040 - CSX7050

#	Part Number	Qty	*Designation*	ⓘ
1	**84072431**	*Engine Air*	Main	
2	**84072430**	*Engine Air*	Safety	
3	**84607214**	*Cabin Air*	Recirculation	
4	**84807659**	*Cabin Air*	Climate control, outer	
4	**87558895**	*Cabin Air*	Climate control, inner	
5	**2852526**	*Oil*	Engine oil	
6	**87054105**	*Hydraulic*	Filler Filter - Oil tank	
7	**9814477**	*Hydraulic*	Return Filter - Oil tank	
8	**84031924**	*Hydraulic*	Suction - Oil tank	
9	**84453604**	*Hydraulic*	Oil cooler	
10	**84031880**	*Hydraulic*	Hydrostatic pump	
11	**87533313**	*Fuel*		
12	**336430A1**	*Fuel*	With water separator	
13	**9501200**	*Fuel*	Tank	

CX5/6000 CX5080 - CX5090 - CX6080

#	Part Number	Qty	*Designation*	ⓘ
1	**84072431**	*Engine Air*	Main	
2	**84072430**	*Engine Air*	Safety	
3	**84607214**	*Cabin Air*	Recirculation	
4	**84807659**	*Cabin Air*	Climate control, outer	
4	**87558895**	*Cabin Air*	Climate control, inner	
5	**4897898**	*Oil*	Engine oil	
6	**81863799**	*Hydraulic*	Hydrostatic pump	
7	**84100813**	*Hydraulic*	Oil cooler outlet Filter - Oil tank	
8	**87054105**	*Hydraulic*	Filler Filter - Oil tank	
9	**9814477**	*Hydraulic*	Return Filter - Oil tank	
10	**84004451**	*Hydraulic*	Hydraulic system	
11	**87533313**	*Fuel*		
12	**336430A1**	*Fuel*	With water separator	
13	**9502050**	*Fuel*	Tank	

CX5/6000 CX6090

#	Part Number	Qty	*Designation*	ⓘ
1	**84069017**	*Engine Air*	Main	
2	**84069018**	*Engine Air*	Safety	
2	**87682986**	*Engine Air*	Safety	
3	**84607214**	*Cabin Air*	Recirculation	
4	**84807659**	*Cabin Air*	Climate control, outer	
4	**87558895**	*Cabin Air*	Climate control, inner	
5	**2996570**	*Oil*	Engine oil	
6	**81863799**	*Hydraulic*	Hydrostatic pump	
7	**84100813**	*Hydraulic*	Oil cooler outlet Filter - Oil tank	
8	**87054105**	*Hydraulic*	Filler Filter - Oil tank	
9	**9814477**	*Hydraulic*	Return Filter - Oil tank	
10	**84004451**	*Hydraulic*	Hydraulic system	
11	**87533313**	*Fuel*		
12	**336430A1**	*Fuel*	With water separator	
13	**9502050**	*Fuel*	Tank	

CX8000 CX8040 - CX8050 - CX8060 - CX8070 - CX8080

#	Part Number	Qty	*Designation*	ⓘ
1	**336430A1**	*Fuel*		
2	**84337371**	*Fuel*	With water separator	
3	**9501200**	*Fuel*	Tank strainer	
4	**84069017**	*Engine Air*	Main	
5	**84069018**	*Engine Air*	Safety	
6	**84074777**	*Hydraulic*	Hydrostatic pump	
7	**84226258**	*Oil*	Engine gearbox	
7	**84346773**	*Oil*	Engine oil	
8	**87054105**	*Hydraulic*	Hydraulic tank	
9	**84100813**	*Hydraulic*	Hydraulic tank	
10	**84453604**	*Hydraulic*	Oil cooler	
11	**87682993**	*Cabin Air*	Recirculation	
12	**84058793**	*Cabin Air*	Climate control	

#	Part Number	Qty	*Designation*	ⓘ
1	**84443964**		*Engine Air*	Main
2	**84443965**		*Engine Air*	Safety
3	**84057282**		*Engine Air*	Pre-cleaner
4	**84989840**		*Fuel*	
5	**89502050**		*Fuel*	Tank strainer
6	**99445200**	x2	*Oil*	Engine oil
7	**84453604**		*Hydraulic*	Oil cooler
8	**89811443**		*Hydraulic*	Oil tank
9	**84100813**		*Hydraulic*	Oil tank strainer
10	**81863799**		*Hydraulic*	Hydrostatic pump, 110cc
10	**81863799**	x2	*Hydraulic*	Return filter
10	**84031880**		*Hydraulic*	Hydrostatic pump, 130cc
11	**84058793**		*Cabin Air*	Air conditioning

#	Part Number	Qty	*Designation*	ⓘ
1	**84443964**		*Engine Air*	Main
2	**84443965**		*Engine Air*	Safety
3	**84057282**		*Engine Air*	Pre-cleaner
4	**84989840**		*Fuel*	
5	**89502050**		*Fuel*	Tank strainer
6	**84989839**		*Fuel*	Tank
7	**99445200**	x2	*Oil*	Engine oil
8	**84453604**		*Hydraulic*	Oil cooler
9	**89811443**		*Hydraulic*	Oil tank
10	**84100813**		*Hydraulic*	Oil tank strainer
11	**81863799**	x2	*Hydraulic*	Return filter
11	**84031880**		*Hydraulic*	Hydrostatic pump, 130cc
12	**84058793**		*Cabin Air*	Air conditioning

#	Part Number	Qty	*Designation*	ⓘ
1	**86998333**		*Engine Air*	Main
2	**86998332**		*Engine Air*	Safety
3	**87533313**		*Fuel*	Tank
4	**504179764**		*Oil*	Engine oil
5	**84453604**		*Hydraulic*	Oil cooler
6	**87394395**		*Hydraulic*	Oil tank
7	**84100813**		*Hydraulic*	Oil tank strainer
8	**84074777**		*Hydraulic*	Hydrostatic pump
9	**81863799**	x2	*Hydraulic*	Return filter
10	**84058793**		*Cabin Air*	Air conditioning

#	Part Number	Qty	*Designation*	ⓘ
1	**86998333**		*Engine Air*	Main
2	**86998332**		*Engine Air*	Safety
3	**87519301**		*Fuel*	Tank
4	**504179764**		*Oil*	Engine oil
5	**84453604**		*Hydraulic*	Oil cooler
6	**87394395**		*Hydraulic*	Oil tank
7	**84100813**		*Hydraulic*	Oil tank strainer
8	**84074777**		*Hydraulic*	Hydrostatic pump
9	**81863799**	x2	*Hydraulic*	Return filter
10	**84058793**		*Cabin Air*	Air conditioning

CR CR9060 Elevation

#	Part Number	Qty	*Designation*	ⓘ
1	**86998333**		*Engine Air*	Main
2	**86998332**		*Engine Air*	Safety
3	**84337371**		*Fuel*	Tank
4	**504179764**		*Oil*	Engine oil
5	**84453604**		*Hydraulic*	Hydraulic system
6	**87054105**		*Hydraulic*	Oil tank
7	**84100813**		*Hydraulic*	Oil tank strainer
8	**81863799**		*Hydraulic*	Hydrostatic pump, 165cc
8	**81863799**	x2	*Hydraulic*	Return filter
8	**84074777**		*Hydraulic*	Hydrostatic pump, 110cc/130cc
9	**84058793**		*Cabin Air*	Air conditioning

CR CR9070 Elevation

#	Part Number	Qty	*Designation*	ⓘ
1	**86998333**		*Engine Air*	Main
2	**86998332**		*Engine Air*	Safety
3	**84337371**		*Fuel*	Tank
4	**504082382**		*Oil*	Engine oil
4	**504213800**		*Oil*	Engine oil, Green filter
5	**84453604**		*Hydraulic*	Hydraulic system
6	**87054105**		*Hydraulic*	Oil tank
7	**84100813**		*Hydraulic*	Oil tank strainer
8	**81863799**		*Hydraulic*	Hydrostatic pump, 165cc
8	**81863799**	x2	*Hydraulic*	Return filter
8	**84074777**		*Hydraulic*	Hydrostatic pump, 110cc/130cc
9	**84058793**		*Cabin Air*	Air conditioning

CR CR9080 - CR9090 Elevation

#	Part Number	Qty	*Designation*	ⓘ
1	**84432503**		*Engine Air*	Main
2	**84432504**		*Engine Air*	Safety
3	**84337371**		*Fuel*	Tank
4	**504082382**		*Oil*	Engine oil
4	**504213800**		*Oil*	Engine oil, Green filter
5	**84453604**		*Hydraulic*	Hydraulic system
6	**87054105**		*Hydraulic*	Oil tank
7	**84100813**		*Hydraulic*	Oil tank strainer
8	**81863799**		*Hydraulic*	Hydrostatic pump, 165cc
8	**81863799**	x2	*Hydraulic*	Return filter
8	**84074777**		*Hydraulic*	Hydrostatic pump, 110cc/130cc
9	**84058793**		*Cabin Air*	Air conditioning

FR FR9040 - FR9050 - FR9060 -FR9090

#	Part Number	Qty	*Designation*	ⓘ
1	**84432503**		*Engine Air*	Main
2	**84432504**		*Engine Air*	Safety
3	**87533341**		*Fuel*	Tank
4	**87675543**		*Fuel*	Inline
5	**84337371**		*Fuel*	
6	**504082382**	x2	*Oil*	Engine oil
7	**87054105**		*Hydraulic*	Oil tank filler
8	**84100813**	x2	*Hydraulic*	Oil tank strainer
9	**84168838**		*Hydraulic*	Oil cooler
10	**84161674**		*Hydraulic*	Hydraulic system
11	**81863799**		*Hydraulic*	Hydraulic system
11	**81863799**		*Hydraulic*	Hydraulic pump
12	**84459314**		*Cabin Air*	Roof
13	**84807659**		*Cabin Air*	Climate control, outer
13	**87558895**		*Cabin Air*	Climate control, inner

Application guide by part number

Guide d’application par référence

Anwendungstabelle nach Teilenummer

Applicazioni per codice

Søgekriterier for part numre

Guía de aplicación por referencia

Guia de aplicação código de peça

Toepassingsgids per onderdeelnummer

Przewodnik po numerach części

применение по номеру детали

دليل التطبيق برقم القطعه

Oil			
2852526	TC5000	TC5040 - TC5050 - TC5060 - TC5070 - TC5080	141 - 5
	CSX	CSX7040 - CSX7050	142 - 5
2996570	CX5/6000	CX6090	144 - 5
4897898	CX5/6000	CX5080 - CX5090 - CX6080	143 - 5
5096729	TT	TT50	36 - 3
		TT55	37 - 3
		TT65 - TT75	38 - 3
	TDD	TD60D - TD80D Before Date 05/09/09	56 - 4
		TD60D - TD80D After Date 05/09/09	57 - 4
		TD70D - TD90D - TD95D Before Date 05/09/09	58 - 4
		TD70D - TD90D - TD95D After Date 05/09/09	59 - 4
81879134	TS	TS90 Before Engine Serial Number 139306	73 - 9
		TS100-TS110 Before Engine Serial Number 139306	74 - 7
		TS90 After Engine Serial Number 139307	76 - 9
		TS100-TS110 After Engine Serial Number 139307	77 - 7
	M/60	8160-8260	105 - 4
		8360-8560	106 - 4
		M100-M115	107 - 4
		M135-M160	108 - 4
	TM1	TM115	109 - 3
		TM125	110 - 3
		TM135 - TM150 - TM165	111 - 3
	TM2	TM120 - TM130 - TM140 - TM155 Before Serial Number ACM218235	112 - 4
		TM120 - TM130 - TM140 - TM155 After Serial Number ACM218236	113 - 4
	TM	TM175 - TM190 Before Serial Number ACM218235	120 - 4
		TM175 - TM190 After Serial Number ACM218236	121 - 4
	TC	AL59	139 - 6
		TC52 - TC54 - TC56	140 - 6
84221215	TL	TL70 - TL80	67 - 3
		TL90 - TL100	68 - 3
84222017	TN	TN55 - TN65 - TN70 - TN75	39 - 2
	TNF	TN70F-TN75F-TN80F	40 - 2
		TN90F-TN95F	41 - 2
	TNA	TN60A - TN70A - TN75A	42 - 2
	TNFA	TN75FA (VSN included)	44 - 2
		TN85FA - TN95FA (VSN included)	45 - 2
	TK	TK95M	46 - 1
		TK76 - TK76M - TK85 - TK85M	47 - 1
		TK65F - TK65V - TK75F - TK75M - TK75V	48 - 1
	TKA	TK70FA - TK70VA - TK75FA - TK75MA TK75VA	49 - 1
		TK90A - TK90MA - TK100A	50 - 1
		TK80A - TK80MA	51 - 1
	TDD	TD60D - TD80D Before Date 05/09/09	56 - 4
		TD60D - TD80D After Date 05/09/09	57 - 4
		TD70D - TD90D - TD95D Before Date 05/09/09	58 - 4
		TD70D - TD90D - TD95D After Date 05/09/09	59 - 4

Oil			
84226258	CX8000	CX8040 - CX8050 - CX8060 - CX8070 CX8080	145 - 7
84228488	TNA	TN85A - TN95A	43 - 2
	T4000 NVFS	T4030 Deluxe, Japan	54 - 2
		T4040 - T4050 Deluxe	55 - 2
	TD5000	TD5040-TD5050	65 - 6
	TLA	TL70A - TL80A - TL90A - TL100A Before Engine Serial Number 400031	69 - 2
		TL70A - TL80A - TL90A - TL100A After Engine Serial Number 400032	70 - 2
	T5000	T5030 - T5040 - T5050 - T5060 - T5070	71 - 1
	TSA	TS100A - TS115A	79 - 2
		TS110A - TS125A	80 - 3
		TS135A	81 - 3
		TS100A - TS110A Standard	82 - 2
		TS115A - TS130A Standard	83 - 2
	T6000	T6010-T6020 Delta Version Before Serial Number 710158	84 - 5
		T6010-T6020 Delta Version After Serial Number 710159	85 - 5
		T6030-T6050 Delta Version Before Serial Number 710158	86 - 5
		T6030-T6050 Delta Version After Serial Number 710159	87 - 5
		T6010-T6020 Plus Version Before Serial Number 710158	88 - 5
		T6010-T6020 Plus Version After Serial Number 710159	89 - 5
		T6030-T6050-T6070 Plus Version Before Serial Number 710158	90 - 5
		T6030-T6050-T6070 Plus Version After Serial Number 710159	91 - 5
		T6050 Plus Version Before Serial Number 710158 Without Cab	92 - 5
		T6050 Plus Version After Serial Number 710159 Without Cab	93 - 5
		T6050 Plus Version After 1/12/2009 Without Cab	94 - 5
		T6010-T6020 Plus Version Before 1/12/2009 With Cab	95 - 5
		T6010-T6020 Plus Version After 1/12/2009 With Cab	96 - 5
		T6030-T6050-T6070 Plus Version Before 1/12/2009 With Cab	97 - 5
		T6030-T6050-T6070 Plus Version After 1/12/2009 With Cab	98 - 5
		T6020-T6040-T6060 Elite Version Before Serial Number 710158	99 - 5
		T6020-T6040-T6060 Elite Version After Serial Number 710159	100 - 5
		T6020-T6040-T6060 Elite Version After 1/12/2009	101 - 6
		T6030-T6050-T6070 Elite Version Before Serial Number 710158	102 - 5
		T6030-T6050-T6070 Elite Version After Serial Number 710159	103 - 5
		T6030-T6050-T6070 Elite Version After 1/12/2009	104 - 5
	T6000 RCPC	T6030 RCPC-T6050 RCPC-T6070 RCPC-T6080 RCPC-T6090 RCPC Before Serial Number 710158	114 - 5

Oil			
84228488	T6000 RCPC	**T6030 RCPC-T6050 RCPC-T6070 RCPC-T6080 RCPC-T6090 RCPC** After Serial Number 710159	115 - 5
		T6030E-T6050E-T6070E-T6080E Before Serial Number 710158	116 - 5
		T6030E-T6050E-T6070E-T6080E After Serial Number 710159	117 - 5
	T6.XXX	**T6.120-T6.140**	118 - 1
		T6.155-T6.165-T6.175	119 - 1
	T7000	**T7030-T7040-T7050-T7060** Before Serial Number 710158	124 - 1
		T7030-T7040-T7050-T7060 After Serial Number 710159	125 - 1
	T7000SW	**T7030 -T7040 -T7050 -T7060** Before Serial Number 710158	126 - 1
		T7030 -T7040 -T7050 -T7060 After Serial Number 710159	127 - 1
	T7000AC	**T7030 -T7040 -T7050 -TV7070** Before Serial Number 710158	128 - 1
		T7030 -T7040 -T7050 -TV7070 After Serial Number 710159	129 - 1
		T7030 -T7040 -T7050 -TV7070 After Date (14/09/2010)	130 - 1
	T7.XXXAC	**T7.220 AC-T7.235 AC-T7.250 AC T7.270 AC**	131 - 1
	T7SWB	**T7.170 RCPC-T7.185 RCPC-T7.200 RCPC-T7.210 RCPC**	132 - 1
		T7.170-T7.185-T7.200-T7.210	133 - 1
	T7LWB	**T7.250 PC-T7.250 PC SW-T7.260 PC**	134 - 1
84229397	**TG**	**TG 210-TG230-TG255-TG285**	135 - 2
84287923	**TVT**	**TVT135 - TVT 155 - TVT170 - TVT190 TVT 195**	122 - 11
	T7500	**T7510 - T7520 - T7530 - T7540 - T7550**	123 - 3
84301243	**T8000**	**T8010-T8020-T8030-T8040-T8050** Before Serial Number Z8RW04134	136 - 3
		T8010-T8020-T8030-T8040-T8050 After Serial Number Z8RW04135	137 - 3
84346773	**CX8000**	**CX8040 - CX8050 - CX8060 - CX8070 CX8080**	145 - 7
84475545	**TD4000F**	**T4050F - T4060F** With CAB	62 - 2
		T4050F - T4060F Without CAB	63 - 2
84518337	**TS**	**TS115** Before Engine Serial Number 139306	75 - 7
		TS115 After Engine Serial Number 139307	78 - 7
84565867	**T8.XXX**	**T8.275-T8.300-T8.330-T8.360-T8.390**	138 - 4
86546623	**TC**	**TC21DA**	31 - 1
87289613	**T3000**	**T3010**	33 - 3
		T3020-T3030	34 - 3
		T3040	35 - 3
87415600	**TC**	**TC21D - TC24D**	30 - 1
87679598	T4000 NVFS	**T4020 - T4030** Standard	52 - 2
		T4020 - T4030 Deluxe	53 - 2
	TD4000F	**T4030F - T4040F** With CAB	60 - 2
		T4030F - T4040F Without CAB	61 - 2
	TD5000	**TD5010-TD5020-TD5030**	64 - 6
		TD5030-TD5040 Japan Market	66 - 6
	T5.XXX	**T5.95 - T5.105 - T5.115**	72 - 1
99445200	**CR**	**CR960**	146 - 6
		CR980	147 - 7

Oil			
504082382	**CR**	**CR9070** Elevation	151 - 4
		CR9080 - CR9090 Elevation	152 - 4
	FR	**FR9040 - FR9050 - FR9060 -FR9090**	153 - 6
504179764	**CR**	**CR9060**	148 - 4
		CR9080	149 - 4
		CR9060 Elevation	150 - 4
504213800	**CR**	**CR9070** Elevation	151 - 4
		CR9080 - CR9090 Elevation	152 - 4
SBA140517020	**TC**	**TC24DA**	32 - 1

Fuel

2854796	TLA	TL70A - TL80A - TL90A - TL100A After Engine Serial Number 400032	70 - 1
336430A1	CSX	CSX7040 - CSX7050	142 - 12
	CX5/6000	CX5080 - CX5090 - CX6080	143 - 12
		CX6090	144 - 12
	CX8000	CX8040 - CX8050 - CX8060 - CX8070 CX8080	145 - 1
369842A1	TG	TG 210-TG230-TG255-TG285	135 - 1
	T8000	T8010-T8020-T8030-T8040-T8050 Before Serial Number Z8RW04134	136 - 1
		T8010-T8020-T8030-T8040-T8050 After Serial Number Z8RW04135	137 - 1
	T8.XXX	T8.275-T8.300-T8.330-T8.360-T8.390	138 - 3
9501200	TC	AL59	139 - 2
		TC52 - TC54 - TC56	140 - 2
	TC5000	TC5040 - TC5050 - TC5060 - TC5070 TC5080	141 - 1
	CSX	CSX7040 - CSX7050	142 - 13
	CX8000	CX8040 - CX8050 - CX8060 - CX8070 CX8080	145 - 3
9502050	CX5/6000	CX5080 - CX5090 - CX6080	143 - 13
		CX6090	144 - 13
9978059	T3000	T3010	33 - 2
		T3020-T3030	34 - 2
		T3040	35 - 2
47367180	T4000 NVFS	T4020 - T4030 Standard	52 - 1
	TD5000	TD5010-TD5020-TD5030	64 - 5
47450038	T5.XXX	T5.95 - T5.105 - T5.115	72 - 3
83916922	TS	TS90 Before Engine Serial Number 139306	73 - 16
		TS100-TS110 Before Engine Serial Number 139306	74 - 14
		TS115 Before Engine Serial Number 139306	75 - 13
		TS90 After Engine Serial Number 139307	76 - 16
		TS100-TS110 After Engine Serial Number 139307	77 - 14
		TS115 After Engine Serial Number 139307	78 - 13
84167233	T6000 RCPC	T6030 RCPC-T6050 RCPC-T6070 RCPC-T6080 RCPC-T6090 RCPC Before Serial Number 710158	114 - 8
		T6030 RCPC-T6050 RCPC-T6070 RCPC-T6080 RCPC-T6090 RCPC After Serial Number 710159	115 - 8
84170818	TSA	TS110A - TS125A	80 - 1
		TS135A	81 - 1
	T6000	T6020-T6040-T6060 Elite Version Before Serial Number 710158	99 - 7
		T6030-T6050-T6070 Elite Version Before Serial Number 710158	102 - 7
	T6000 RCPC	T6030 RCPC-T6050 RCPC-T6070 RCPC-T6080 RCPC-T6090 RCPC Before Serial Number 710158	114 - 7
		T6030E-T6050E-T6070E-T6080E Before Serial Number 710158	116 - 7
	T7000	T7030-T7040-T7050-T7060 Before Serial Number 710158	124 - 7
	T7000SW	T7030 -T7040 -T7050 -T7060 Before Serial Number 710158	126 - 6
	T7000AC	T7030 -T7040 -T7050 -TV7070 Before Serial Number 710158	128 - 10
84171722	T4000 NVFS	T4030 Deluxe, Japan	54 - 1

Fuel

84171722	T4000 NVFS	T4040 - T4050 Deluxe	55 - 1
84214564	TT	TT50	36 - 2
		TT55	37 - 2
		TT65 - TT75	38 - 2
	TN	TN55 - TN65 - TN70 - TN75	39 - 1
	TNF	TN70F-TN75F-TN80F	40 - 1
		TN90F-TN95F	41 - 1
	TNA	TN60A - TN70A - TN75A	42 - 1
	TNFA	TN75FA (VSN included)	44 - 1
		TN85FA - TN95FA (VSN included)	45 - 1
	TK	TK95M	46 - 6
		TK76 - TK76M - TK85 - TK85M	47 - 6
		TK65F - TK65V - TK75F - TK75M - TK75V	48 - 6
	TKA	TK70FA - TK70VA - TK75FA - TK75MA TK75VA	49 - 6
		TK90A - TK90MA - TK100A	50 - 6
		TK80A - TK80MA	51 - 6
	TDD	TD60D - TD80D Before Date 05/09/09	56 - 5
		TD60D - TD80D After Date 05/09/09	57 - 5
		TD70D - TD90D - TD95D Before Date 05/09/09	58 - 5
		TD70D - TD90D - TD95D After Date 05/09/09	59 - 5
	TL	TL70 - TL80	67 - 1
		TL90 - TL100	68 - 1
84217953	TT	TT50	36 - 1
		TT55	37 - 1
		TT65 - TT75	38 - 1
	TK	TK95M	46 - 7
		TK76 - TK76M - TK85 - TK85M	47 - 7
	TKA	TK90A - TK90MA - TK100A	50 - 7
		TK80A - TK80MA	51 - 7
	TDD	TD60D - TD80D Before Date 05/09/09	56 - 1
		TD60D - TD80D After Date 05/09/09	57 - 1
		TD70D - TD90D - TD95D Before Date 05/09/09	58 - 1
		TD70D - TD90D - TD95D After Date 05/09/09	59 - 1
	TL	TL70 - TL80	67 - 2
		TL90 - TL100	68 - 2
84269163	T7500	T7510 - T7520 - T7530 - T7540 - T7550	123 - 5
84269164	T7500	T7510 - T7520 - T7530 - T7540 - T7550	123 - 4
84269165	TVT	TVT135 - TVT 155 - TVT170 - TVT190 TVT 195	122 - 4
84269166	TVT	TVT135 - TVT 155 - TVT170 - TVT190 TVT 195	122 - 3
84278636	T6000	T6020-T6040-T6060 Elite Version After Serial Number 710159	100 - 7
		T6020-T6040-T6060 Elite Version After 1/12/2009	101 - 9
		T6030-T6050-T6070 Elite Version After Serial Number 710159	103 - 7
		T6030-T6050-T6070 Elite Version After 1/12/2009	104 - 7
	T6000 RCPC	T6030 RCPC-T6050 RCPC-T6070 RCPC-T6080 RCPC-T6090 RCPC After Serial Number 710159	115 - 7
		T6030E-T6050E-T6070E-T6080E After Serial Number 710159	117 - 7
	T6.XXX	T6.120-T6.140	118 - 10

Fuel

84278636	T6.XXX	T6.155-T6.165-T6.175	119 - 10
	T7000	T7030-T7040-T7050-T7060 After Serial Number 710159	125 - 7
	T7000SW	T7030 -T7040 -T7050 -T7060 After Serial Number 710159	127 - 6
	T7000AC	T7030 -T7040 -T7050 -TV7070 After Serial Number 710159	129 - 10
		T7030 -T7040 -T7050 -TV7070 After Date (14/09/2010)	130 - 10
	T7.XXXAC	T7.220 AC-T7.235 AC-T7.250 AC T7.270 AC	131 - 2
	T7SWB	T7.170 RCPC-T7.185 RCPC-T7.200 RCPC-T7.210 RCPC	132 - 5
		T7.170-T7.185-T7.200-T7.210	133 - 4
	T7LWB	T7.250 PC-T7.250 PC SW-T7.260 PC	134 - 3
84328598	T5.XXX	T5.95 - T5.105 - T5.115	72 - 11
	T6000	T6010-T6020 Delta Version Before Serial Number 710158	84 - 6
		T6010-T6020 Delta Version After Serial Number 710159	85 - 6
		T6030-T6050 Delta Version Before Serial Number 710158	86 - 6
		T6030-T6050 Delta Version After Serial Number 710159	87 - 6
		T6010-T6020 Plus Version Before Serial Number 710158	88 - 6
		T6010-T6020 Plus Version After Serial Number 710159	89 - 6
		T6030-T6050-T6070 Plus Version Before Serial Number 710158	90 - 6
		T6030-T6050-T6070 Plus Version After Serial Number 710159	91 - 6
		T6050 Plus Version Before Serial Number 710158 Without Cab	92 - 6
		T6050 Plus Version After Serial Number 710159 Without Cab	93 - 6
		T6050 Plus Version After 1/12/2009 Without Cab	94 - 6
		T6010-T6020 Plus Version Before 1/12/2009 With Cab	95 - 6
		T6010-T6020 Plus Version After 1/12/2009 With Cab	96 - 6
		T6030-T6050-T6070 Plus Version Before 1/12/2009 With Cab	97 - 6
		T6030-T6050-T6070 Plus Version After 1/12/2009 With Cab	98 - 6
		T6020-T6040-T6060 Elite Version Before Serial Number 710158	99 - 6
		T6020-T6040-T6060 Elite Version After Serial Number 710159	100 - 6
		T6020-T6040-T6060 Elite Version After 1/12/2009	101 - 7
		T6030-T6050-T6070 Elite Version Before Serial Number 710158	102 - 6
		T6030-T6050-T6070 Elite Version After Serial Number 710159	103 - 6
		T6030-T6050-T6070 Elite Version After 1/12/2009	104 - 6
	TM2	TM120 - TM130 - TM140 - TM155 Before Serial Number ACM218235	112 - 3
		TM120 - TM130 - TM140 - TM155 After Serial Number ACM218236	113 - 3
	T6000 RCPC	T6030 RCPC-T6050 RCPC-T6070 RCPC-T6080 RCPC-T6090 RCPC Before Serial Number 710158	114 - 6

Fuel

84328598	T6000 RCPC	T6030 RCPC-T6050 RCPC-T6070 RCPC-T6080 RCPC-T6090 RCPC After Serial Number 710159	115 - 6
		T6030E-T6050E-T6070E-T6080E Before Serial Number 710158	116 - 6
		T6030E-T6050E-T6070E-T6080E After Serial Number 710159	117 - 6
	T6.XXX	T6.120-T6.140	118 - 4
		T6.155-T6.165-T6.175	119 - 4
	TM	TM175 - TM190 Before Serial Number ACM218235	120 - 3
		TM175 - TM190 After Serial Number ACM218236	121 - 3
	T7000	T7030-T7040-T7050-T7060 Before Serial Number 710158	124 - 11
		T7030-T7040-T7050-T7060 After Serial Number 710159	125 - 11
	T7000SW	T7030 -T7040 -T7050 -T7060 Before Serial Number 710158	126 - 10
		T7030 -T7040 -T7050 -T7060 After Serial Number 710159	127 - 10
	T7000AC	T7030 -T7040 -T7050 -TV7070 Before Serial Number 710158	128 - 4
		T7030 -T7040 -T7050 -TV7070 After Serial Number 710159	129 - 4
		T7030 -T7040 -T7050 -TV7070 After Date (14/09/2010)	130 - 4
	T7.XXXAC	T7.220 AC-T7.235 AC-T7.250 AC T7.270 AC	131 - 4
	T7SWB	T7.170 RCPC-T7.185 RCPC-T7.200 RCPC-T7.210 RCPC	132 - 7
		T7.170-T7.185-T7.200-T7.210	133 - 6
	T7LWB	T7.250 PC-T7.250 PC SW-T7.260 PC	134 - 5
84329736	T4000 NVFS	T4020 - T4030 Standard	52 - 7
		T4030 Deluxe, Japan	54 - 14
		T4040 - T4050 Deluxe	55 - 14
84337371	CX8000	CX8040 - CX8050 - CX8060 - CX8070 CX8080	145 - 2
	CR	CR9060 Elevation	150 - 3
		CR9070 Elevation	151 - 3
		CR9080 - CR9090 Elevation	152 - 3
	FR	FR9040 - FR9050 - FR9060 -FR9090	153 - 5
84348883	T8.XXX	T8.275-T8.300-T8.330-T8.360-T8.390	138 - 9
84412164	TSA	TS110A - TS125A	80 - 2
		TS135A	81 - 2
	T6000	T6020-T6040-T6060 Elite Version Before Serial Number 710158	99 - 8
		T6020-T6040-T6060 Elite Version After Serial Number 710159	100 - 8
		T6020-T6040-T6060 Elite Version After 1/12/2009	101 - 10
		T6030-T6050-T6070 Elite Version Before Serial Number 710158	102 - 8
		T6030-T6050-T6070 Elite Version After Serial Number 710159	103 - 8
		T6030-T6050-T6070 Elite Version After 1/12/2009	104 - 8
	T6000 RCPC	T6030 RCPC-T6050 RCPC-T6070 RCPC-T6080 RCPC-T6090 RCPC Before Serial Number 710158	114 - 8

Fuel

84412164	T6000 RCPC	T6030 RCPC-T6050 RCPC-T6070 RCPC-T6080 RCPC-T6090 RCPC After Serial Number 710159	115 - 8
		T6030E-T6050E-T6070E-T6080E Before Serial Number 710158	116 - 8
		T6030E-T6050E-T6070E-T6080E After Serial Number 710159	117 - 8
	T6.XXX	T6.120-T6.140	118 - 11
		T6.155-T6.165-T6.175	119 - 11
	T7000	T7030-T7040-T7050-T7060 Before Serial Number 710158	124 - 8
		T7030-T7040-T7050-T7060 After Serial Number 710159	125 - 8
	T7000SW	T7030 -T7040 -T7050 -T7060 Before Serial Number 710158	126 - 7
		T7030 -T7040 -T7050 -T7060 After Serial Number 710159	127 - 7
	T7000AC	T7030 -T7040 -T7050 -TV7070 Before Serial Number 710158	128 - 11
		T7030 -T7040 -T7050 -TV7070 After Serial Number 710159	129 - 11
		T7030 -T7040 -T7050 -TV7070 After Date (14/09/2010)	130 - 11
	T7.XXXAC	T7.220 AC-T7.235 AC-T7.250 AC T7.270 AC	131 - 3
	T7SWB	T7.170 RCPC-T7.185 RCPC T7.200 RCPC-T7.210 RCPC	132 - 6
		T7.170-T7.185-T7.200-T7.210	133 - 5
	T7LWB	T7.250 PC-T7.250 PC SW-T7.260 PC	134 - 4
84476807	TG	TG 210-TG230-TG255-TG285	135 - 3
84477359	T8000	T8010-T8020-T8030-T8040-T8050 Before Serial Number Z8RW04134	136 - 5
		T8010-T8020-T8030-T8040-T8050 After Serial Number Z8RW04135	137 - 5
84477495	TD4000F	T4030F - T4040F With CAB	60 - 1
		T4030F - T4040F Without CAB	61 - 1
	TD5000	TD5030-TD5040 Japan Market	66 - 5
84526251	T6000	T6010-T6020 Delta Version After Serial Number 710159	85 - 7
		T6030-T6050 Delta Version After Serial Number 710159	87 - 7
		T6010-T6020 Plus Version After Serial Number 710159	89 - 7
		T6030-T6050-T6070 Plus Version After Serial Number 710159	91 - 7
		T6050 Plus Version After Serial Number 710159 Without Cab	93 - 7
		T6050 Plus Version After 1/12/2009 Without Cab	94 - 7
		T6010-T6020 Plus Version Before 1/12/2009 With Cab	95 - 7
		T6010-T6020 Plus Version After 1/12/2009 With Cab	96 - 7
		T6030-T6050-T6070 Plus Version Before 1/12/2009 With Cab	97 - 7
		T6030-T6050-T6070 Plus Version After 1/12/2009 With Cab	98 - 7
84557099	TG	TG 210-TG230-TG255-TG285	135 - 4
84565884	TNA	TN85A - TN95A	43 - 1
	TD4000F	T4050F - T4060F With CAB	62 - 1
		T4050F - T4060F Without CAB	63 - 1
	TD5000	TD5040-TD5050	65 - 5

Fuel

84565884	TLA	TL70A - TL80A - TL90A - TL100A Before Engine Serial Number 400031	69 - 1
	T5000	T5030 - T5040 - T5050 - T5060 - T5070	71 - 3
	TSA	TS100A - TS115A	79 - 1
		TS100A - TS110A Standard	82 - 1
		TS115A - TS130A Standard	83 - 1
	T6000	T6010-T6020 Delta Version Before Serial Number 710158	84 - 7
		T6030-T6050 Delta Version Before Serial Number 710158	86 - 7
		T6010-T6020 Plus Version Before Serial Number 710158	88 - 7
		T6030-T6050-T6070 Plus Version Before Serial Number 710158	90 - 7
		T6050 Plus Version Before Serial Number 710158 Without Cab	92 - 7
84566248	T7LWB	T7.250 PC-T7.250 PC SW-T7.260 PC	134 - 9
84989839	CR	CR980	147 - 6
84989840	CR	CR960	146 - 4
		CR980	147 - 4
87289612	T3000	T3010	33 - 1
		T3020-T3030	34 - 1
		T3040	35 - 1
87300039	TC	TC21D - TC24D	30 - 2
87329736	TD5000	TD5010-TD5020-TD5030	64 - 9
		TD5040-TD5050	65 - 9
	T5000	T5030 - T5040 - T5050 - T5060 - T5070	71 - 2
87360572	T8000	T8010-T8020-T8030-T8040-T8050 Before Serial Number Z8RW04134	136 - 4
		T8010-T8020-T8030-T8040-T8050 After Serial Number Z8RW04135	137 - 4
87487344	T4000 NVFS	T4020 - T4030 Deluxe	53 - 1
87519301	TC	AL59	139 - 3
		TC52 - TC54 - TC56	140 - 3
	TC5000	TC5040 - TC5050 - TC5060 - TC5070 TC5080	141 - 2
	CR	CR9080	149 - 3
87533313	CSX	CSX7040 - CSX7050	142 - 11
	CX5/6000	CX5080 - CX5090 - CX6080	143 - 11
		CX6090	144 - 11
	CR	CR9060	148 - 3
87533341	FR	FR9040 - FR9050 - FR9060 -FR9090	153 - 3
87675543	FR	FR9040 - FR9050 - FR9060 -FR9090	153 - 4
87718479	T7.XXXAC	T7.220 AC-T7.235 AC-T7.250 AC T7.270 AC	131 - 10
87800220	TC	TC52 - TC54 - TC56	140 - 1
87801285	TS	TS90 Before Engine Serial Number 139306	73 - 15
		TS100-TS110 Before Engine Serial Number 139306	74 - 13
		TS115 Before Engine Serial Number 139306	75 - 12
		TS90 After Engine Serial Number 139307	76 - 15
		TS100-TS110 After Engine Serial Number 139307	77 - 13
		TS115 After Engine Serial Number 139307	78 - 12
	TC	TC52 - TC54 - TC56	140 - 13
87802332	M/60	8160-8260	105 - 9
		8360-8560	106 - 9

Fuel			
87802332	M/60	M100-M115	107 - 9
		M135-M160	108 - 9
	TM1	TM115	109 - 2
		TM125	110 - 2
		TM135 - TM150 - TM165	111 - 2
	TM2	TM120 - TM130 - TM140 - TM155 Before Serial Number ACM218235	112 - 2
	TM	TM175 - TM190 Before Serial Number ACM218235	120 - 2
87802728	TM2	TM120 - TM130 - TM140 - TM155 Before Serial Number ACM218235	112 - 1
		TM120 - TM130 - TM140 - TM155 After Serial Number ACM218236	113 - 1
	TM	TM175 - TM190 Before Serial Number ACM218235	120 - 1
		TM175 - TM190 After Serial Number ACM218236	121 - 1
87803441	TM2	TM120 - TM130 - TM140 - TM155 After Serial Number ACM218236	113 - 2
	TM	TM175 - TM190 After Serial Number ACM218236	121 - 2
87803444	TM2	TM120 - TM130 - TM140 - TM155 After Serial Number ACM218236	113 - 2
	TM	TM175 - TM190 After Serial Number ACM218236	121 - 2
87840136	TC	AL59	139 - 1
87840590	M/60	8160-8260	105 - 10
		8360-8560	106 - 10
		M100-M115	107 - 10
		M135-M160	108 - 10
	TM1	TM115	109 - 1
		TM125	110 - 1
		TM135 - TM150 - TM165	111 - 1
	TM2	TM120 - TM130 - TM140 - TM155 Before Serial Number ACM218235	112 - 2
	TM	TM175 - TM190 Before Serial Number ACM218235	120 - 2
87840591	M/60	8160-8260	105 - 9
		8360-8560	106 - 9
		M100-M115	107 - 9
		M135-M160	108 - 9
89502050	CR	CR960	146 - 5
		CR980	147 - 5
98439682	TDD	TD60D - TD80D Before Date 05/09/09	56 - 5
		TD60D - TD80D After Date 05/09/09	57 - 5
		TD70D - TD90D - TD95D Before Date 05/09/09	58 - 5
		TD70D - TD90D - TD95D After Date 05/09/09	59 - 5
5801439820	T8.XXX	T8.275-T8.300-T8.330-T8.360-T8.390	138 - 13
5801585394	T5.XXX	T5.95 - T5.105 - T5.115	72 - 2
SBA360720020	TC	TC21DA	31 - 2
		TC24DA	32 - 2

Engine Air

1909117	TNF	TN90F-TN95F	41 - 4
	TK	TK95M	46 - 3
		TK76 - TK76M - TK85 - TK85M	47 - 3
	TKA	TK90A - TK90MA - TK100A	50 - 3
		TK80A - TK80MA	51 - 3
1930605	TL	TL90 - TL100	68 - 4
1930825	TNFA	TN85FA - TN95FA (VSN included)	45 - 4
	TKA	TK90A - TK90MA - TK100A	50 - 3
	TL	TL90 - TL100	68 - 5
1931027	TNF	TN90F-TN95F	41 - 3
	TK	TK95M	46 - 2
451526A1	TG	TG 210-TG230-TG255-TG285	135 - 10
4987747	TDD	TD60D - TD80D Before Date 05/09/09	56 - 6
		TD60D - TD80D After Date 05/09/09	57 - 6
		TD70D - TD90D - TD95D Before Date 05/09/09	58 - 6
		TD70D - TD90D - TD95D After Date 05/09/09	59 - 6
47372276	TMI	TMI15	109 - 4
82008600	M/60	8160-8260	105 - 7
		M100-M115	107 - 7
82008601	TS	TS90 Before Engine Serial Number 139306	73 - 2
		TS100-TS110 Before Engine Serial Number 139306	74 - 2
		TS115 Before Engine Serial Number 139306	75 - 2
		TS90 After Engine Serial Number 139307	76 - 2
		TS100-TS110 After Engine Serial Number 139307	77 - 2
		TS115 After Engine Serial Number 139307	78 - 2
	M/60	8160-8260	105 - 8
		M100-M115	107 - 8
	TMI	TMI15	109 - 5
82008606	M/60	8360-8560	106 - 7
		M135-M160	108 - 7
82008607	M/60	8360-8560	106 - 8
		M135-M160	108 - 8
82014794	M/60	8160-8260	105 - 8
		M100-M115	107 - 8
	TMI	TMI15	109 - 5
82027153	TS	TS90 Before Engine Serial Number 139306	73 - 1
		TS100-TS110 Before Engine Serial Number 139306	74 - 1
		TS115 Before Engine Serial Number 139306	75 - 1
		TS90 After Engine Serial Number 139307	76 - 1
		TS100-TS110 After Engine Serial Number 139307	77 - 1
		TS115 After Engine Serial Number 139307	78 - 1
82034433	TM	TMI75 - TMI90 Before Serial Number ACM218235	120 - 5
		TMI75 - TMI90 After Serial Number ACM218236	121 - 5
82034435	TM	TMI75 - TMI90 Before Serial Number ACM218235	120 - 6
		TMI75 - TMI90 After Serial Number ACM218236	121 - 6

Engine Air

82034441	TMI	TMI25	110 - 5
		TMI35 - TMI50 - TMI65	111 - 5
	TM2	TMI20 - TMI30 - TMI40 - TMI55 Before Serial Number ACM218235	112 - 6
		TMI20 - TMI30 - TMI40 - TMI55 After Serial Number ACM218236	113 - 6
82926173	TS	TS90 Before Engine Serial Number 139306	73 - 5
		TS90 After Engine Serial Number 139307	76 - 5
84057282	CR	CR960	146 - 3
		CR980	147 - 3
84069017	CX5/6000	CX6090	144 - 1
	CX8000	CX8040 - CX8050 - CX8060 - CX8070 CX8080	145 - 4
84069018	CX5/6000	CX6090	144 - 2
	CX8000	CX8040 - CX8050 - CX8060 - CX8070 CX8080	145 - 5
84072430	TC	AL59	139 - 5
		TC52 - TC54 - TC56	140 - 5
	TC5000	TC5040 - TC5050 - TC5060 - TC5070 TC5080	141 - 4
	CSX	CSX7040 - CSX7050	142 - 2
	CX5/6000	CX5080 - CX5090 - CX6080	143 - 2
84072431	TC	AL59	139 - 4
		TC52 - TC54 - TC56	140 - 4
	TC5000	TC5040 - TC5050 - TC5060 - TC5070 TC5080	141 - 3
	CSX	CSX7040 - CSX7050	142 - 1
	CX5/6000	CX5080 - CX5090 - CX6080	143 - 1
84191182	T8.XXX	T8.275-T8.300-T8.330-T8.360-T8.390	138 - 5
84217229	TT	TT65 - TT75	38 - 6
	TDD	TD70D - TD90D - TD95D Before Date 05/09/09	58 - 2
		TD70D - TD90D - TD95D After Date 05/09/09	59 - 2
	TD5000	TD5010-TD5020-TD5030	64 - 3
		TD5040-TD5050	65 - 3
		TD5030-TD5040 Japan Market	66 - 3
	TLA	TL70A - TL80A - TL90A - TL100A Before Engine Serial Number 400031	69 - 3
		TL70A - TL80A - TL90A - TL100A After Engine Serial Number 400032	70 - 3
84432503	CR	CR9080 - CR9090 Elevation	152 - 1
	FR	FR9040 - FR9050 - FR9060 -FR9090	153 - 1
84432504	CR	CR9080 - CR9090 Elevation	152 - 2
	FR	FR9040 - FR9050 - FR9060 -FR9090	153 - 2
84443964	CR	CR960	146 - 1
		CR980	147 - 1
84443965	CR	CR960	146 - 2
		CR980	147 - 2
84465005	TS	TS90 Before Engine Serial Number 139306	73 - 3
		TS90 After Engine Serial Number 139307	76 - 3
84476647	T8000	T8010-T8020-T8030-T8040-T8050 Before Serial Number Z8RW04134	136 - 9
84479225	T5.XXX	T5.95 - T5.105 - T5.115	72 - 5
84479228	T5.XXX	T5.95 - T5.105 - T5.115	72 - 4
84493217	TSA	TS100A - TS115A	79 - 3
		TS110A - TS125A	80 - 4

Engine Air

84493217	TSA	TS100A - TS110A Standard	82 - 3
	T6000	T6010-T6020 Delta Version Before Serial Number 710158	84 - 3
		T6010-T6020 Delta Version After Serial Number 710159	85 - 3
		T6010-T6020 Plus Version Before Serial Number 710158	88 - 3
		T6010-T6020 Plus Version After Serial Number 710159	89 - 3
		T6010-T6020 Plus Version Before 1/12/2009 With Cab	95 - 3
		T6010-T6020 Plus Version After 1/12/2009 With Cab	96 - 3
		T6020-T6040-T6060 Elite Version Before Serial Number 710158	99 - 3
		T6020-T6040-T6060 Elite Version After Serial Number 710159	100 - 3
		T6020-T6040-T6060 Elite Version After 1/12/2009	101 - 4
	T6.XXX	T6.120-T6.140	118 - 8
85804347	TS	TS90 Before Engine Serial Number 139306	73 - 4
		TS100-TS110 Before Engine Serial Number 139306	74 - 3
		TS115 Before Engine Serial Number 139306	75 - 3
		TS90 After Engine Serial Number 139307	76 - 4
		TS100-TS110 After Engine Serial Number 139307	77 - 3
		TS115 After Engine Serial Number 139307	78 - 3
86982523	TT	TT50	36 - 7
		TT55	37 - 7
	TN	TN55 - TN65 - TN70 - TN75	39 - 4
	TNF	TN70F-TN75F-TN80F	40 - 4
	TNA	TN60A - TN70A - TN75A	42 - 4
	TNFA	TN75FA (VSN included)	44 - 4
	TK	TK76 - TK76M - TK85 - TK85M	47 - 3
		TK65F - TK65V - TK75F - TK75M - TK75V	48 - 3
	TKA	TK70FA - TK70VA - TK75FA - TK75MA TK75VA	49 - 3
		TK80A - TK80MA	51 - 3
	T4000 NVFS	T4020 - T4030 Standard	52 - 4
		T4020 - T4030 Deluxe	53 - 4
	TDD	TD60D - TD80D Before Date 05/09/09	56 - 3
		TD60D - TD80D After Date 05/09/09	57 - 3
	TL	TL70 - TL80	67 - 5
86998332	CR	CR9060	148 - 2
		CR9080	149 - 2
		CR9060 Elevation	150 - 2
		CR9070 Elevation	151 - 2
86998333	CR	CR9060	148 - 1
		CR9080	149 - 1
		CR9060 Elevation	150 - 1
		CR9070 Elevation	151 - 1
87037984	T4000 NVFS	T4030 Deluxe, Japan	54 - 5

Engine Air

87037984	T4000 NVFS	T4040 - T4050 Deluxe	55 - 5
	TD4000F	T4030F - T4040F With CAB	60 - 3
		T4030F - T4040F Without CAB	61 - 3
		T4050F - T4060F With CAB	62 - 3
		T4050F - T4060F Without CAB	63 - 3
	T5000	T5030 - T5040 - T5050 - T5060 - T5070	71 - 5
87037985	T4000 NVFS	T4030 Deluxe, Japan	54 - 6
		T4040 - T4050 Deluxe	55 - 6
	TD4000F	T4030F - T4040F With CAB	60 - 4
		T4030F - T4040F Without CAB	61 - 4
		T4050F - T4060F With CAB	62 - 4
		T4050F - T4060F Without CAB	63 - 4
	T5000	T5030 - T5040 - T5050 - T5060 - T5070	71 - 4
87290071	T3000	T3040	35 - 4
87290072	T3000	T3040	35 - 5
87290073	T3000	T3010	33 - 4
		T3020-T3030	34 - 4
87290074	T3000	T3010	33 - 5
		T3020-T3030	34 - 5
87313626	T4000 NVFS	T4030 Deluxe, Japan	54 - 3
		T4040 - T4050 Deluxe	55 - 3
87313629	T4000 NVFS	T4030 Deluxe, Japan	54 - 4
		T4040 - T4050 Deluxe	55 - 4
87338668	TG	TG 210-TG230-TG255-TG285	135 - 9
87342507	TNFA	TN85FA - TN95FA (VSN included)	45 - 3
	TK	TK95M	46 - 2
		TK76 - TK76M - TK85 - TK85M	47 - 2
	TKA	TK90A - TK90MA - TK100A	50 - 2
		TK90A - TK90MA - TK100A	50 - 2
		TK80A - TK80MA	51 - 2
87356547	T8.XXX	T8.275-T8.300-T8.330-T8.360-T8.390	138 - 6
87394880	TM1	TM125	110 - 4
		TM135 - TM150 - TM165	111 - 4
	TM2	TM120 - TM130 - TM140 - TM155 Before Serial Number ACM218235	112 - 5
		TM120 - TM130 - TM140 - TM155 After Serial Number ACM218236	113 - 5
87394887	M/60	8160-8260	105 - 7
		8360-8560	106 - 7
		M100-M115	107 - 7
		M135-M160	108 - 7
	TM1	TM115	109 - 4
		TM125	110 - 4
		TM135 - TM150 - TM165	111 - 4
	TM2	TM120 - TM130 - TM140 - TM155 Before Serial Number ACM218235	112 - 5
		TM120 - TM130 - TM140 - TM155 After Serial Number ACM218236	113 - 5
87408704	T8000	T8010-T8020-T8030-T8040-T8050 Before Serial Number Z8RW04134	136 - 10

Engine Air

87517153	T7000	T7030-T7040-T7050-T7060 Before Serial Number 710158	124 - 6
		T7030-T7040-T7050-T7060 After Serial Number 710159	125 - 6
	T7000SW	T7030 -T7040 -T7050 -T7060 Before Serial Number 710158	126 - 5
		T7030 -T7040 -T7050 -T7060 After Serial Number 710159	127 - 5
	T7000AC	T7030 -T7040 -T7050 -TV7070 Before Serial Number 710158	128 - 6
		T7030 -T7040 -T7050 -TV7070 After Serial Number 710159	129 - 6
		T7030 -T7040 -T7050 -TV7070 After Date (14/09/2010)	130 - 7
	T7.XXXAC	T7.220 AC-T7.235 AC-T7.250 AC T7.270 AC	131 - 7
	T7LWB	T7.250 PC-T7.250 PC SW-T7.260 PC	134 - 8
87517154	T7000	T7030-T7040-T7050-T7060 Before Serial Number 710158	124 - 5
		T7030-T7040-T7050-T7060 After Serial Number 710159	125 - 5
	T7000SW	T7030 -T7040 -T7050 -T7060 Before Serial Number 710158	126 - 4
		T7030 -T7040 -T7050 -T7060 After Serial Number 710159	127 - 4
	T7000AC	T7030 -T7040 -T7050 -TV7070 Before Serial Number 710158	128 - 5
		T7030 -T7040 -T7050 -TV7070 After Serial Number 710159	129 - 5
		T7030 -T7040 -T7050 -TV7070 After Date (14/09/2010)	130 - 6
	T7.XXXAC	T7.220 AC-T7.235 AC-T7.250 AC T7.270 AC	131 - 6
	T7LWB	T7.250 PC-T7.250 PC SW-T7.260 PC	134 - 7
87682967	TK	TK65F - TK65V - TK75F - TK75M - TK75V	48 - 3
	TKA	TK70FA - TK70VA - TK75FA - TK75MA TK75VA	49 - 3
	TL	TL70 - TL80	67 - 5
87682986	CX5/6000	CX6090	144 - 2
87682990	TSA	TS135A	81 - 4
		TS115A - TS130A Standard	83 - 3
	T6000	T6030-T6050 Delta Version Before Serial Number 710158	86 - 3
		T6030-T6050 Delta Version After Serial Number 710159	87 - 3
		T6030-T6050-T6070 Plus Version Before Serial Number 710158	90 - 3
		T6030-T6050-T6070 Plus Version After Serial Number 710159	91 - 3
		T6050 Plus Version Before Serial Number 710158 Without Cab	92 - 3
		T6050 Plus Version After Serial Number 710159 Without Cab	93 - 3
		T6050 Plus Version After 1/12/2009 Without Cab	94 - 3
		T6030-T6050-T6070 Plus Version Before 1/12/2009 With Cab	97 - 3
		T6030-T6050-T6070 Plus Version After 1/12/2009 With Cab	98 - 3
		T6030-T6050-T6070 Elite Version Before Serial Number 710158	102 - 3
		T6030-T6050-T6070 Elite Version After Serial Number 710159	103 - 3
		T6030-T6050-T6070 Elite Version After 1/12/2009	104 - 3

Engine Air

87682990	TM2	TM120 - TM130 - TM140 - TM155 Before Serial Number ACM218235	112 - 5
		TM120 - TM130 - TM140 - TM155 After Serial Number ACM218236	113 - 5
	T6000 RCPC	T6030 RCPC-T6050 RCPC-T6070 RCPC-T6080 RCPC-T6090 RCPC Before Serial Number 710158	114 - 3
		T6030 RCPC-T6050 RCPC-T6070 RCPC-T6080 RCPC-T6090 RCPC After Serial Number 710159	115 - 3
		T6030E-T6050E-T6070E-T6080E Before Serial Number 710158	116 - 3
		T6030E-T6050E-T6070E-T6080E After Serial Number 710159	117 - 3
	T6.XXX	T6.155-T6.165-T6.175	119 - 8
	T7SWB	T7.170 RCPC-T7.185 RCPC T7.200 RCPC-T7.210 RCPC	132 - 3
		T7.170-T7.185-T7.200-T7.210	133 - 2
87682992	TSA	TS100A - TS115A	79 - 4
		TS100A - TS115A	79 - 4
		TS110A - TS125A	80 - 5
		TS110A - TS125A	80 - 5
		TS100A - TS110A Standard	82 - 4
		TS100A - TS110A Standard	82 - 4
	T6000	T6010-T6020 Delta Version Before Serial Number 710158	84 - 4
		T6010-T6020 Delta Version After Serial Number 710159	85 - 4
		T6010-T6020 Plus Version Before Serial Number 710158	88 - 4
		T6010-T6020 Plus Version After Serial Number 710159	89 - 4
		T6010-T6020 Plus Version Before 1/12/2009 With Cab	95 - 4
		T6010-T6020 Plus Version After 1/12/2009 With Cab	96 - 4
		T6020-T6040-T6060 Elite Version Before Serial Number 710158	99 - 4
		T6020-T6040-T6060 Elite Version After Serial Number 710159	100 - 4
		T6020-T6040-T6060 Elite Version After 1/12/2009	101 - 5
	T6.XXX	T6.120-T6.140	118 - 9
		T6.120-T6.140	118 - 9
87682993	TNA	TN85A - TN95A	43 - 3
	TDD	TD60D - TD80D Before Date 05/09/09	56 - 2
		TD60D - TD80D After Date 05/09/09	57 - 2
		TD70D - TD90D - TD95D Before Date 05/09/09	58 - 2
		TD70D - TD90D - TD95D After Date 05/09/09	59 - 2
	TL	TL90 - TL100	68 - 4
	TLA	TL70A - TL80A - TL90A - TL100A Before Engine Serial Number 400031	69 - 3
		TL70A - TL80A - TL90A - TL100A After Engine Serial Number 400032	70 - 3
87682999	TT	TT65 - TT75	38 - 7
	TNA	TN85A - TN95A	43 - 4
	TDD	TD60D - TD80D Before Date 05/09/09	56 - 3
		TD60D - TD80D After Date 05/09/09	57 - 3
87682999		TD70D - TD90D - TD95D Before Date 05/09/09	58 - 3

Engine Air

87682999	TDD	TD70D - TD90D - TD95D After Date 05/09/09	59 - 3
	TD5000	TD5010-TD5020-TD5030	64 - 4
		TD5040-TD5050	65 - 4
		TD5030-TD5040 Japan Market	66 - 4
	TL	TL90 - TL100	68 - 5
	TLA	TL70A - TL80A - TL90A - TL100A Before Engine Serial Number 400031	69 - 4
		TL70A - TL80A - TL90A - TL100A After Engine Serial Number 400032	70 - 4
87683000	TSA	TS135A	81 - 5
		TS135A	81 - 5
		TS115A - TS130A Standard	83 - 4
		TS115A - TS130A Standard	83 - 4
	T6000	T6030-T6050 Delta Version Before Serial Number 710158	86 - 4
		T6030-T6050 Delta Version After Serial Number 710159	87 - 4
		T6030-T6050-T6070 Plus Version Before Serial Number 710158	90 - 4
		T6030-T6050-T6070 Plus Version After Serial Number 710159	91 - 4
		T6050 Plus Version Before Serial Number 710158 Without Cab	92 - 4
		T6050 Plus Version After Serial Number 710159 Without Cab	93 - 4
		T6050 Plus Version After 1/12/2009 Without Cab	94 - 4
		T6030-T6050-T6070 Plus Version Before 1/12/2009 With Cab	97 - 4
		T6030-T6050-T6070 Plus Version After 1/12/2009 With Cab	98 - 4
		T6030-T6050-T6070 Elite Version Before Serial Number 710158	102 - 4
		T6030-T6050-T6070 Elite Version After Serial Number 710159	103 - 4
		T6030-T6050-T6070 Elite Version After 1/12/2009	104 - 4
	TM2	TM120 - TM130 - TM140 - TM155 Before Serial Number ACM218235	112 - 6
		TM120 - TM130 - TM140 - TM155 After Serial Number ACM218236	113 - 6
	T6000 RCPC	T6030 RCPC-T6050 RCPC-T6070 RCPC-T6080 RCPC-T6090 RCPC Before Serial Number 710158	114 - 4
		T6030 RCPC-T6050 RCPC-T6070 RCPC-T6080 RCPC-T6090 RCPC After Serial Number 710159	115 - 4
		T6030E-T6050E-T6070E-T6080E Before Serial Number 710158	116 - 4
		T6030E-T6050E-T6070E-T6080E After Serial Number 710159	117 - 4
	T6.XXX	T6.155-T6.165-T6.175	119 - 9
		T6.155-T6.165-T6.175	119 - 9
	T7SWB	T7.170 RCPC-T7.185 RCPC T7.200 RCPC-T7.210 RCPC	132 - 4
		T7.170-T7.185-T7.200-T7.210	133 - 3
87704244	TSA	TS100A - TS115A	79 - 3
		TS110A - TS125A	80 - 4
		TS100A - TS110A Standard	82 - 3
	T6000	T6010-T6020 Delta Version Before Serial Number 710158	84 - 3

Engine Air

87704244	T6000	T6010-T6020 Delta Version After Serial Number 710159	85 - 3
		T6010-T6020 Plus Version Before Serial Number 710158	88 - 3
		T6010-T6020 Plus Version After Serial Number 710159	89 - 3
		T6010-T6020 Plus Version Before 1/12/2009 With Cab	95 - 3
		T6010-T6020 Plus Version After 1/12/2009 With Cab	96 - 3
		T6020-T6040-T6060 Elite Version Before Serial Number 710158	99 - 3
		T6020-T6040-T6060 Elite Version After Serial Number 710159	100 - 3
		T6020-T6040-T6060 Elite Version After 1/12/2009	101 - 4
	T6.XXX	T6.120-T6.140	118 - 8
87704248	TSA	TS135A	81 - 4
		TS115A - TS130A Standard	83 - 3
	T6000	T6030-T6050 Delta Version Before Serial Number 710158	86 - 3
		T6030-T6050 Delta Version After Serial Number 710159	87 - 3
		T6030-T6050-T6070 Plus Version Before Serial Number 710158	90 - 3
		T6030-T6050-T6070 Plus Version After Serial Number 710159	91 - 3
		T6050 Plus Version Before Serial Number 710158 Without Cab	92 - 3
		T6050 Plus Version After Serial Number 710159 Without Cab	93 - 3
		T6050 Plus Version After 1/12/2009 Without Cab	94 - 3
		T6030-T6050-T6070 Plus Version Before 1/12/2009 With Cab	97 - 3
		T6030-T6050-T6070 Plus Version After 1/12/2009 With Cab	98 - 3
		T6030-T6050-T6070 Elite Version Before Serial Number 710158	102 - 3
		T6030-T6050-T6070 Elite Version After Serial Number 710159	103 - 3
		T6030-T6050-T6070 Elite Version After 1/12/2009	104 - 3
	T6000 RCPC	T6030 RCPC-T6050 RCPC T6070 RCPC-T6080 RCPC-T6090 RCPC Before Serial Number 710158	114 - 3
		T6030 RCPC-T6050 RCPC T6070 RCPC-T6080 RCPC-T6090 RCPC After Serial Number 710159	115 - 3
		T6030E-T6050E-T6070E-T6080E Before Serial Number 710158	116 - 3
		T6030E-T6050E-T6070E-T6080E After Serial Number 710159	117 - 3
	T6.XXX	T6.155-T6.165-T6.175	119 - 8
87704249	TT	TT50	36 - 6
		TT55	37 - 6
	TN	TN55 - TN65 - TN70 - TN75	39 - 3
	TNF	TN70F-TN75F-TN80F	40 - 3
	TNA	TN60A - TN70A - TN75A	42 - 3
	TNFA	TN75FA (VSN included)	44 - 3
	TK	TK76 - TK76M - TK85 - TK85M	47 - 2
		TK65F - TK65V - TK75F - TK75M - TK75V	48 - 2
	TKA	TK70FA - TK70VA - TK75FA - TK75MA TK75VA	49 - 2
87704249		TK80A - TK80MA	51 - 2

Engine Air

87704249	**T4000 NVFS**	**T4020 - T4030** Standard	52 - 3
		T4020 - T4030 Deluxe	53 - 3
	TDD	**TD60D - TD80D** Before Date 05/09/09	56 - 2
		TD60D - TD80D After Date 05/09/09	57 - 2
	TL	**TL70 - TL80**	67 - 4
87741560	**T8000**	**T8010-T8020-T8030-T8040-T8050** After Serial Number Z8RW04135	137 - 10
87741569	**T8000**	**T8010-T8020-T8030-T8040-T8050** After Serial Number Z8RW04135	137 - 9
87780710	**TK**	**TK65F - TK65V - TK75F - TK75M - TK75V**	48 - 2
	TKA	**TK70FA - TK70VA - TK75FA - TK75MA TK75VA**	49 - 2
	TL	**TL70 - TL80**	67 - 4
162000190700	**TVT**	**TVT135 - TVT 155 - TVT170 - TVT190 TVT 195**	122 - 5
	T7500	**T7510 - T7520 - T7530 - T7540 - T7550**	123 - 6
162000190710	**TVT**	**TVT135 - TVT 155 - TVT170 - TVT190 TVT 195**	122 - 6
	T7500	**T7510 - T7520 - T7530 - T7540 - T7550**	123 - 7
SBA314531174	**TC**	**TC21DA**	31 - 3
		TC24DA	32 - 3
SBA314531175	**TC**	**TC21DA**	31 - 4
		TC24DA	32 - 4

Hydraulic

1909143	TT	TT55	37 - 5
		TT65 - TT75	38 - 5
	TK	TK95M	46 - 5
		TK76 - TK76M - TK85 - TK85M	47 - 5
		TK65F - TK65V - TK75F - TK75M - TK75V	48 - 5
	TKA	TK70FA - TK70VA - TK75FA - TK75MA TK75VA	49 - 5
		TK90A - TK90MA - TK100A	50 - 5
		TK80A - TK80MA	51 - 5
	TDD	TD60D - TD80D Before Date 05/09/09	56 - 7
		TD60D - TD80D After Date 05/09/09	57 - 7
		TD70D - TD90D - TD95D Before Date 05/09/09	58 - 7
		TD70D - TD90D - TD95D After Date 05/09/09	59 - 7
	TL	TL70 - TL80	67 - 7
		TL90 - TL100	68 - 7
5097103	TT	TT50	36 - 4
		TT55	37 - 4
		TT65 - TT75	38 - 4
5194879	TN	TN55 - TN65 - TN70 - TN75	39 - 5
	TNF	TN70F-TN75F-TN80F	40 - 5
		TN90F-TN95F	41 - 5
	TNA	TN60A - TN70A - TN75A	42 - 5
		TN85A - TN95A	43 - 5
	TNFA	TN75FA (VSN included)	44 - 5
		TN85FA - TN95FA (VSN included)	45 - 5
	T4000 NVFS	T4020 - T4030 Standard	52 - 5
		T4020 - T4030 Deluxe	53 - 5
		T4030 Deluxe, Japan	54 - 7
		T4040 - T4050 Deluxe	55 - 7
	TD4000F	T4030F - T4040F With CAB	60 - 5
		T4030F - T4040F Without CAB	61 - 5
		T4050F - T4060F With CAB	62 - 5
		T4050F - T4060F Without CAB	63 - 5
	TD5000	TD5010-TD5020-TD5030	64 - 1
		TD5040-TD5050	65 - 1
		TD5030-TD5040 Japan Market	66 - 1
	TL	TL70 - TL80	67 - 6
		TL90 - TL100	68 - 6
	TLA	TL70A - TL80A - TL90A - TL100A Before Engine Serial Number 400031	69 - 5
		TL70A - TL80A - TL90A - TL100A After Engine Serial Number 400032	70 - 5
	T5000	T5030 - T5040 - T5050 - T5060 - T5070	71 - 7
	T5.XXX	T5.95 - T5.105 - T5.115	72 - 10
9811443	TC	AL59	139 - 9
		TC52 - TC54 - TC56	140 - 9
	TC5000	TC5040 - TC5050 - TC5060 - TC5070 TC5080	141 - 8
9814477	TC	AL59	139 - 10
		TC52 - TC54 - TC56	140 - 10
	TC5000	TC5040 - TC5050 - TC5060 - TC5070 TC5080	141 - 9

Hydraulic

9814477	CSX	CSX7040 - CSX7050	142 - 7
	CX5/6000	CX5080 - CX5090 - CX6080	143 - 9
		CX6090	144 - 9
9821387	TM	TM175 - TM190 Before Serial Number ACM218235	120 - 9
		TM175 - TM190 After Serial Number ACM218236	121 - 9
9976807	T3000	T3010	33 - 6
		T3020-T3030	34 - 8
		T3040	35 - 8
47365582	M/60	8160-8260	105 - 1
		8360-8560	106 - 1
		M100-M115	107 - 1
		M135-M160	108 - 1
	TM1	TM115	109 - 8
		TM125	110 - 8
	TM2	TM120 - TM130 - TM140 - TM155 Before Serial Number ACM218235	112 - 8
		TM120 - TM130 - TM140 - TM155 After Serial Number ACM218236	113 - 8
47425202	TK	TK95M	46 - 4
		TK76 - TK76M - TK85 - TK85M	47 - 4
		TK65F - TK65V - TK75F - TK75M - TK75V	48 - 4
	TKA	TK70FA - TK70VA - TK75FA - TK75MA TK75VA	49 - 4
		TK90A - TK90MA - TK100A	50 - 4
		TK80A - TK80MA	51 - 4
	TDD	TD60D - TD80D Before Date 05/09/09	56 - 8
		TD70D - TD90D - TD95D Before Date 05/09/09	58 - 8
47436570	TVT	TVT135 - TVT 155 - TVT170 - TVT190 TVT 195	122 - 9
	T7500	T7510 - T7520 - T7530 - T7540 - T7550	123 - 10
47522804	TVT	TVT135 - TVT 155 - TVT170 - TVT190 TVT 195	122 - 7
	T7500	T7510 - T7520 - T7530 - T7540 - T7550	123 - 8
47617638	T6000 RCPC	T6030E-T6050E-T6070E-T6080E Before Serial Number 710158	116 - 10
		T6030E-T6050E-T6070E-T6080E After Serial Number 710159	117 - 10
81863799	CX5/6000	CX5080 - CX5090 - CX6080	143 - 6
		CX6090	144 - 6
	CR	CR960	146 - 10
		CR960	146 - 10
		CR980	147 - 11
		CR9060	148 - 9
		CR9080	149 - 9
		CR9060 Elevation	150 - 8
		CR9060 Elevation	150 - 8
		CR9070 Elevation	151 - 8
		CR9070 Elevation	151 - 8
		CR9080 - CR9090 Elevation	152 - 8
		CR9080 - CR9090 Elevation	152 - 8
	FR	FR9040 - FR9050 - FR9060 -FR9090	153 - 11
		FR9040 - FR9050 - FR9060 -FR9090	153 - 11
81869132	TS	TS90 Before Engine Serial Number 139306	73 - 12

Hydraulic

81869132	TS	TS90 Before Engine Serial Number 139306	73 - 12
		TS100-TS110 Before Engine Serial Number 139306	74 - 10
		TS100-TS110 Before Engine Serial Number 139306	74 - 10
		TS115 Before Engine Serial Number 139306	75 - 10
		TS115 Before Engine Serial Number 139306	75 - 10
		TS90 After Engine Serial Number 139307	76 - 12
		TS90 After Engine Serial Number 139307	76 - 12
		TS100-TS110 After Engine Serial Number 139307	77 - 10
		TS100-TS110 After Engine Serial Number 139307	77 - 10
		TS115 After Engine Serial Number 139307	78 - 10
		TS115 After Engine Serial Number 139307	78 - 10
82003166	TS	TS90 Before Engine Serial Number 139306	73 - 13
		TS100-TS110 Before Engine Serial Number 139306	74 - 11
		TS115 Before Engine Serial Number 139306	75 - 11
		TS90 After Engine Serial Number 139307	76 - 13
		TS100-TS110 After Engine Serial Number 139307	77 - 11
		TS115 After Engine Serial Number 139307	78 - 11
83912298	TC	TC21D - TC24D	30 - 3
84004451	CX5/6000	CX5080 - CX5090 - CX6080	143 - 10
		CX6090	144 - 10
84031880	TC	AL59	139 - 12
		TC52 - TC54 - TC56	140 - 12
	CSX	CSX7040 - CSX7050	142 - 10
	CR	CR960	146 - 10
		CR980	147 - 11
84031924	TC	AL59	139 - 11
		TC52 - TC54 - TC56	140 - 11
	TC5000	TC5040 - TC5050 - TC5060 - TC5070 TC5080	141 - 10
	CSX	CSX7040 - CSX7050	142 - 8
84074777	CX8000	CX8040 - CX8050 - CX8060 - CX8070 CX8080	145 - 6
	CR	CR9060	148 - 8
		CR9080	149 - 8
		CR9060 Elevation	150 - 8
		CR9070 Elevation	151 - 8
		CR9080 - CR9090 Elevation	152 - 8
84100813	CX5/6000	CX5080 - CX5090 - CX6080	143 - 7
		CX6090	144 - 7
	CX8000	CX8040 - CX8050 - CX8060 - CX8070 CX8080	145 - 9
	CR	CR960	146 - 9
		CR980	147 - 10
		CR9060	148 - 7
		CR9080	149 - 7

Hydraulic

84100813	CR	CR9060 Elevation	150 - 7
		CR9070 Elevation	151 - 7
		CR9080 - CR9090 Elevation	152 - 7
	FR	FR9040 - FR9050 - FR9060 -FR9090	153 - 8
84161674	FR	FR9040 - FR9050 - FR9060 -FR9090	153 - 10
84168838	FR	FR9040 - FR9050 - FR9060 -FR9090	153 - 9
84202794	T8.XXX	T8.275-T8.300-T8.330-T8.360-T8.390	138 - 7
84226258	TS	TS90 Before Engine Serial Number 139306	73 - 11
		TS100-TS110 Before Engine Serial Number 139306	74 - 9
		TS115 Before Engine Serial Number 139306	75 - 9
		TS90 After Engine Serial Number 139307	76 - 11
		TS100-TS110 After Engine Serial Number 139307	77 - 9
		TS115 After Engine Serial Number 139307	78 - 9
	TSA	TS100A - TS115A	79 - 5
		TS110A - TS125A	80 - 6
		TS100A - TS110A Standard	82 - 5
		TS100A - TS110A Standard	82 - 6
		TS115A - TS130A Standard	83 - 5
		TS115A - TS130A Standard	83 - 6
	T6000	T6010-T6020 Delta Version Before Serial Number 710158	84 - 8
		T6010-T6020 Delta Version After Serial Number 710159	85 - 8
		T6030-T6050 Delta Version Before Serial Number 710158	86 - 8
		T6030-T6050 Delta Version After Serial Number 710159	87 - 8
		T6010-T6020 Plus Version Before Serial Number 710158	88 - 8
		T6010-T6020 Plus Version After Serial Number 710159	89 - 8
		T6030-T6050-T6070 Plus Version Before Serial Number 710158	90 - 8
		T6030-T6050-T6070 Plus Version After Serial Number 710159	91 - 8
		T6050 Plus Version Before Serial Number 710158 Without Cab	92 - 8
		T6050 Plus Version After Serial Number 710159 Without Cab	93 - 8
		T6010-T6020 Plus Version Before 1/12/2009 With Cab	95 - 8
		T6010-T6020 Plus Version After 1/12/2009 With Cab	96 - 8
		T6030-T6050-T6070 Plus Version Before 1/12/2009 With Cab	97 - 8
		T6030-T6050-T6070 Plus Version After 1/12/2009 With Cab	98 - 8
		T6020-T6040-T6060 Elite Version Before Serial Number 710158	99 - 9
		T6020-T6040-T6060 Elite Version After Serial Number 710159	100 - 9
		T6020-T6040-T6060 Elite Version After 1/12/2009	101 - 11

Hydraulic

84226258	T6000	T6030-T6050-T6070 Elite Version Before Serial Number 710158	102 - 9
		T6030-T6050-T6070 Elite Version After Serial Number 710159	103 - 9
		T6030-T6050-T6070 Elite Version After 1/12/2009	104 - 9
	M/60	8160-8260	105 - 6
		8360-8560	106 - 6
		M100-M115	107 - 6
		M135-M160	108 - 6
	TM1	TM115	109 - 7
		TM125	110 - 7
		TM135 - TM150 - TM165	111 - 7
	T6.XXX	T6.120-T6.140	118 - 2
		T6.155-T6.165-T6.175	119 - 2
	T7SWB	T7.170 RCPC-T7.185 RCPC-T7.200 RCPC-T7.210 RCPC	132 - 2
	T7LWB	T7.250 PC-T7.250 PC SW-T7.260 PC	134 - 2
	TG	TG 210-TG230-TG255-TG285	135 - 8
	T8000	T8010-T8020-T8030-T8040-T8050 Before Serial Number Z8RW04134	136 - 8
		T8010-T8020-T8030-T8040-T8050 After Serial Number Z8RW04135	137 - 8
84226260	TSA	TS100A - TS115A	79 - 8
		TS110A - TS125A	80 - 9
		TS135A	81 - 6
	T6000	T6010-T6020 Plus Version Before Serial Number 710158	88 - 10
		T6010-T6020 Plus Version After Serial Number 710159	89 - 10
		T6030-T6050-T6070 Plus Version Before Serial Number 710158	90 - 10
		T6030-T6050-T6070 Plus Version After Serial Number 710159	91 - 10
		T6050 Plus Version Before Serial Number 710158 Without Cab	92 - 9
		T6050 Plus Version After Serial Number 710159 Without Cab	93 - 9
		T6010-T6020 Plus Version Before 1/12/2009 With Cab	95 - 10
		T6030-T6050-T6070 Plus Version Before 1/12/2009 With Cab	97 - 10
		T6020-T6040-T6060 Elite Version Before Serial Number 710158	99 - 11
		T6020-T6040-T6060 Elite Version After Serial Number 710159	100 - 11
		T6030-T6050-T6070 Elite Version Before Serial Number 710158	102 - 11
		T6030-T6050-T6070 Elite Version After Serial Number 710159	103 - 11
	TM	TM175 - TM190 Before Serial Number ACM218235	120 - 7
		TM175 - TM190 After Serial Number ACM218236	121 - 7
	T7000	T7030-T7040-T7050-T7060 Before Serial Number 710158	124 - 2
		T7030-T7040-T7050-T7060 After Serial Number 710159	125 - 2
84226263	TSA	TS100A - TS115A	79 - 7
		TS110A - TS125A	80 - 8
		TS135A	81 - 7
	T6000	T6010-T6020 Plus Version Before Serial Number 710158	88 - 9
		T6010-T6020 Plus Version After Serial Number 710159	89 - 9

Hydraulic

84226263	T6000	T6030-T6050-T6070 Plus Version Before Serial Number 710158	90 - 9
		T6030-T6050-T6070 Plus Version After Serial Number 710159	91 - 9
		T6050 Plus Version After 1/12/2009 Without Cab	94 - 8
		T6010-T6020 Plus Version Before 1/12/2009 With Cab	95 - 9
		T6030-T6050-T6070 Plus Version Before 1/12/2009 With Cab	97 - 9
		T6020-T6040-T6060 Elite Version Before Serial Number 710158	99 - 10
		T6020-T6040-T6060 Elite Version After Serial Number 710159	100 - 10
		T6020-T6040-T6060 Elite Version After 1/12/2009	101 - 12
		T6030-T6050-T6070 Elite Version Before Serial Number 710158	102 - 10
		T6030-T6050-T6070 Elite Version After Serial Number 710159	103 - 10
		T6030-T6050-T6070 Elite Version After 1/12/2009	104 - 10
	T6000 RCPC	T6030 RCPC-T6050 RCPC T6070 RCPC-T6080 RCPC-T6090 RCPC Before Serial Number 710158	114 - 9
		T6030 RCPC-T6050 RCPC T6070 RCPC-T6080 RCPC-T6090 RCPC After Serial Number 710159	115 - 9
		T6030E-T6050E-T6070E-T6080E Before Serial Number 710158	116 - 9
		T6030E-T6050E-T6070E-T6080E After Serial Number 710159	117 - 9
	TM	TM175 - TM190 Before Serial Number ACM218235	120 - 8
		TM175 - TM190 After Serial Number ACM218236	121 - 8
	T7000	T7030-T7040-T7050-T7060 Before Serial Number 710158	124 - 3
		T7030-T7040-T7050-T7060 After Serial Number 710159	125 - 3
	T7000SW	T7030 - T7040 - T7050 - T7060 Before Serial Number 710158	126 - 2
		T7030 - T7040 - T7050 - T7060 After Serial Number 710159	127 - 2
	T7LWB	T7.250 PC-T7.250 PC SW-T7.260 PC	134 - 2
84237579	T7500	T7510 - T7520 - T7530 - T7540 - T7550	123 - 1
84240234	T8.XXX	T8.275-T8.300-T8.330-T8.360-T8.390	138 - 8
84248043	T5.XXX	T5.95 - T5.105 - T5.115	72 - 6
	TS	TS90 Before Engine Serial Number 139306	73 - 10
		TS90 Before Engine Serial Number 139306	73 - 10
		TS100-TS110 Before Engine Serial Number 139306	74 - 8
		TS100-TS110 Before Engine Serial Number 139306	74 - 8
		TS115 Before Engine Serial Number 139306	75 - 8
		TS115 Before Engine Serial Number 139306	75 - 8
		TS90 After Engine Serial Number 139307	76 - 10
		TS90 After Engine Serial Number 139307	76 - 10
		TS100-TS110 After Engine Serial Number 139307	77 - 8
		TS100-TS110 After Engine Serial Number 139307	77 - 8

Hydraulic

84248043	TS	TS115 After Engine Serial Number 139307	78 - 8
		TS115 After Engine Serial Number 139307	78 - 8
	TSA	TS100A - TS115A	79 - 6
		TS110A - TS125A	80 - 7
		TS100A - TS110A Standard	82 - 7
		TS115A - TS130A Standard	83 - 7
	T6000	T6010-T6020 Delta Version Before Serial Number 710158	84 - 9
		T6010-T6020 Delta Version After Serial Number 710159	85 - 9
		T6030-T6050 Delta Version Before Serial Number 710158	86 - 9
		T6030-T6050 Delta Version After Serial Number 710159	87 - 9
		T6010-T6020 Plus Version Before Serial Number 710158	88 - 11
		T6010-T6020 Plus Version After Serial Number 710159	89 - 11
		T6030-T6050-T6070 Plus Version Before Serial Number 710158	90 - 11
		T6030-T6050-T6070 Plus Version After Serial Number 710159	91 - 11
		T6050 Plus Version Before Serial Number 710158 Without Cab	92 - 10
		T6050 Plus Version After Serial Number 710159 Without Cab	93 - 10
		T6050 Plus Version After 1/12/2009 Without Cab	94 - 10
		T6010-T6020 Plus Version Before 1/12/2009 With Cab	95 - 11
		T6010-T6020 Plus Version After 1/12/2009 With Cab	96 - 10
		T6030-T6050-T6070 Plus Version Before 1/12/2009 With Cab	97 - 11
		T6030-T6050-T6070 Plus Version After 1/12/2009 With Cab	98 - 10
	M/60	8160-8260	105 - 5
		8360-8560	106 - 5
		M100-M115	107 - 5
		M135-M160	108 - 5
	TM1	TM115	109 - 6
		TM125	110 - 6
		TM135 - TM150 - TM165	111 - 6
	TM2	TM120 - TM130 - TM140 - TM155 Before Serial Number ACM218235	112 - 7
		TM120 - TM130 - TM140 - TM155 After Serial Number ACM218236	113 - 7
	T6.XXX	T6.120-T6.140	118 - 3
		T6.155-T6.165-T6.175	119 - 3
84257511	TN	TN55 - TN65 - TN70 - TN75	39 - 6
	TNF	TN70F-TN75F-TN80F	40 - 6
		TN90F-TN95F	41 - 6
	TNA	TN60A - TN70A - TN75A	42 - 6
		TN85A - TN95A	43 - 6
	TNFA	TN75FA (VSN included)	44 - 6
		TN85FA - TN95FA (VSN included)	45 - 6
	T4000 NVFS	T4020 - T4030 Standard	52 - 6
		T4020 - T4030 Deluxe	53 - 6

Hydraulic

84257511	T4000 NVFS	T4030 Deluxe, Japan	54 - 8
		T4040 - T4050 Deluxe	55 - 8
	TDD	TD60D - TD80D After Date 05/09/09	57 - 8
		TD70D - TD90D - TD95D After Date 05/09/09	59 - 8
	TD4000F	T4030F - T4040F With CAB	60 - 6
		T4030F - T4040F Without CAB	61 - 6
		T4050F - T4060F With CAB	62 - 6
		T4050F - T4060F Without CAB	63 - 6
	TD5000	TD5010-TD5020-TD5030	64 - 2
		TD5040-TD5050	65 - 2
		TD5030-TD5040 Japan Market	66 - 2
	TLA	TL70A - TL80A - TL90A - TL100A Before Engine Serial Number 400031	69 - 6
		TL70A - TL80A - TL90A - TL100A After Engine Serial Number 400032	70 - 6
	T5000	T5030 - T5040 - T5050 - T5060 - T5070	71 - 6
84324774	T7000AC	T7030 -T7040 -T7050 -TV7070 Before Serial Number 710158	128 - 7
		T7030 -T7040 -T7050 -TV7070 After Serial Number 710159	129 - 7
84356072	T8.XXX	T8.275-T8.300-T8.330-T8.360-T8.390	138 - 10
84371476	T7SWB	T7.170-T7.185-T7.200-T7.210	133 - 7
84383316	T8.XXX	T8.275-T8.300-T8.330-T8.360-T8.390	138 - 11
84399618	TL	TL70 - TL80	67 - 8
		TL90 - TL100	68 - 8
84417139	T7000AC	T7030 -T7040 -T7050 -TV7070 After Date (14/09/2010)	130 - 5
	T7.XXXAC	T7.220 AC-T7.235 AC-T7.250 AC T7.270 AC	131 - 5
	T7SWB	T7.170-T7.185-T7.200-T7.210	133 - 8
84453604	CSX	CSX7040 - CSX7050	142 - 9
	CX8000	CX8040 - CX8050 - CX8060 - CX8070 CX8080	145 - 10
	CR	CR960	146 - 7
		CR980	147 - 8
		CR9060	148 - 5
		CR9080	149 - 5
		CR9060 Elevation	150 - 5
		CR9070 Elevation	151 - 5
		CR9080 - CR9090 Elevation	152 - 5
84469093	TVT	TVT135 - TVT 155 - TVT170 - TVT190 TVT 195	122 - 10
84476646	T7000	T7030-T7040-T7050-T7060 Before Serial Number 710158	124 - 2
		T7030-T7040-T7050-T7060 After Serial Number 710159	125 - 2
84487937	TG	TG 210-TG230-TG255-TG285	135 - 7
	T8000	T8010-T8020-T8030-T8040-T8050 Before Serial Number Z8RW04134	136 - 7
		T8010-T8020-T8030-T8040-T8050 After Serial Number Z8RW04135	137 - 7
	T8.XXX	T8.275-T8.300-T8.330-T8.360-T8.390	138 - 1
84564510	T5.XXX	T5.95 - T5.105 - T5.115	72 - 7
84581942	T5.XXX	T5.95 - T5.105 - T5.115	72 - 6

Hydraulic			
87054105	CSX	CSX7040 - CSX7050	142 - 6
	CX5/6000	CX5080 - CX5090 - CX6080	143 - 8
		CX6090	144 - 8
	CX8000	CX8040 - CX8050 - CX8060 - CX8070 CX8080	145 - 8
	CR	CR9060 Elevation	150 - 6
		CR9070 Elevation	151 - 6
		CR9080 - CR9090 Elevation	152 - 6
	FR	FR9040 - FR9050 - FR9060 -FR9090	153 - 7
87394395	CR	CR9060	148 - 6
		CR9080	149 - 6
87588814	T7000AC	T7030 -T7040 -T7050 -TV7070 Before Serial Number 710158	128 - 8
		T7030 -T7040 -T7050 -TV7070 After Serial Number 710159	129 - 8
		T7030 -T7040 -T7050 -TV7070 After Date (14/09/2010)	130 - 9
	T7.XXXAC	T7.220 AC-T7.235 AC-T7.250 AC T7.270 AC	131 - 8
	T7SWB	T7.170-T7.185-T7.200-T7.210	133 - 10
87708150	T6000	T6050 Plus Version After 1/12/2009 Without Cab	94 - 9
		T6010-T6020 Plus Version After 1/12/2009 With Cab	96 - 9
		T6030-T6050-T6070 Plus Version After 1/12/2009 With Cab	98 - 9
		T6020-T6040-T6060 Elite Version After 1/12/2009	101 - 13
		T6030-T6050-T6070 Elite Version After 1/12/2009	104 - 11
	T6000 RCPC	T6030 RCPC-T6050 RCPC T6070 RCPC-T6080 RCPC-T6090 RCPC Before Serial Number 710158	114 - 10
		T6030 RCPC-T6050 RCPC T6070 RCPC-T6080 RCPC-T6090 RCPC After Serial Number 710159	115 - 10
	T6.XXX	T6.120-T6.140	118 - 5
		T6.155-T6.165-T6.175	119 - 5
	T7000	T7030-T7040-T7050-T7060 Before Serial Number 710158	124 - 4
		T7030-T7040-T7050-T7060 After Serial Number 710159	125 - 4
	T7000SW	T7030 -T7040 -T7050 -T7060 Before Serial Number 710158	126 - 3
		T7030 -T7040 -T7050 -T7060 After Serial Number 710159	127 - 3
	T7000AC	T7030 -T7040 -T7050 -TV7070 Before Serial Number 710158	128 - 9
		T7030 -T7040 -T7050 -TV7070 After Serial Number 710159	129 - 9
		T7030 -T7040 -T7050 -TV7070 After Date (14/09/2010)	130 - 9
	T7.XXXAC	T7.220 AC-T7.235 AC-T7.250 AC T7.270 AC	131 - 9
	T7SWB	T7.170 RCPC-T7.185 RCPC T7.200 RCPC-T7.210 RCPC	132 - 9
		T7.170-T7.185-T7.200-T7.210	133 - 11
	T7LWB	T7.250 PC-T7.250 PC SW-T7.260 PC	134 - 6
89811443	CR	CR960	146 - 8
		CR980	147 - 9
192310280011	TVT	TVT135 - TVT 155 - TVT170 - TVT190 TVT 195	122 - 8
	T7500	T7510 - T7520 - T7530 - T7540 - T7550	123 - 9
SBA340501030	TC	TC21D - TC24D	30 - 4

Hydraulic			
SBA340500890	TC	TC21DA	31 - 6
SBA340500930	TC	TC21DA	31 - 5
SBA340500890	TC	TC24DA	32 - 6
SBA340500930	TC	TC24DA	32 - 5
F0NNB486AA	TS	TS90 Before Engine Serial Number 139306	73 - 14
		TS100-TS110 Before Engine Serial Number 139306	74 - 12
		TS90 After Engine Serial Number 139307	76 - 14
		TS100-TS110 After Engine Serial Number 139307	77 - 12

Cabin Air

922214	TC	AL59	139 - 8
		TC52 - TC54 - TC56	140 - 8
	TC5000	TC5040 - TC5050 - TC5060 - TC5070 TC5080	141 - 7
5097838	TDD	TD60D - TD80D Before Date 05/09/09	56 - 9
		TD60D - TD80D After Date 05/09/09	57 - 9
		TD70D - TD90D - TD95D Before Date 05/09/09	58 - 9
		TD70D - TD90D - TD95D After Date 05/09/09	59 - 9
	TD5000	TD5010-TD5020-TD5030	64 - 7
		TD5040-TD5050	65 - 7
		TD5030-TD5040 Japan Market	66 - 7
5196842	TL	TL70 - TL80	67 - 9
		TL90 - TL100	68 - 9
	TLA	TL70A - TL80A - TL90A - TL100A Before Engine Serial Number 400031	69 - 8
		TL70A - TL80A - TL90A - TL100A After Engine Serial Number 400032	70 - 8
	T5000	T5030 - T5040 - T5050 - T5060 - T5070	71 - 8
	M/60	8160-8260	105 - 2
		8360-8560	106 - 2
		M100-M115	107 - 2
		M135-M160	108 - 2
9977652	T3000	T3010	33 - 7
		T3020-T3030	34 - 7
		T3040	35 - 7
9977794	T3000	T3020-T3030	34 - 8
		T3040	35 - 8
44911740	TNF	TN70F-TN75F-TN80F	40 - 7
		TN90F-TN95F	41 - 7
47129095	TNFA	TN75FA (VSN included)	44 - 8
		TN85FA - TN95FA (VSN included)	45 - 8
	T4000 NVFS	T4020 - T4030 Deluxe	53 - 10
		T4030 Deluxe, Japan	54 - 12
		T4040 - T4050 Deluxe	55 - 12
47129134	TNFA	TN75FA (VSN included)	44 - 8
		TN85FA - TN95FA (VSN included)	45 - 8
	T4000 NVFS	T4020 - T4030 Deluxe	53 - 11
		T4030 Deluxe, Japan	54 - 13
		T4040 - T4050 Deluxe	55 - 13
	TD4000F	T4030F - T4040F With CAB	60 - 8
		T4050F - T4060F With CAB	62 - 8
47131888	TNFA	TN75FA (VSN included)	44 - 7
		TN85FA - TN95FA (VSN included)	45 - 7
	T4000 NVFS	T4020 - T4030 Deluxe	53 - 7
		T4030 Deluxe, Japan	54 - 9
		T4040 - T4050 Deluxe	55 - 9
47131906	TNFA	TN75FA (VSN included)	44 - 9
		TN85FA - TN95FA (VSN included)	45 - 9

Cabin Air

47131906	T4000 NVFS	T4020 - T4030 Deluxe	53 - 8
		T4030 Deluxe, Japan	54 - 10
		T4040 - T4050 Deluxe	55 - 10
	TD4000F	T4030F - T4040F With CAB	60 - 9
		T4050F - T4060F With CAB	62 - 9
47131907	TNFA	TN75FA (VSN included)	44 - 10
		TN85FA - TN95FA (VSN included)	45 - 10
	T4000 NVFS	T4020 - T4030 Deluxe	53 - 9
		T4030 Deluxe, Japan	54 - 11
		T4040 - T4050 Deluxe	55 - 11
47131908	TNFA	TN75FA (VSN included)	44 - 9
		TN85FA - TN95FA (VSN included)	45 - 9
	T4000 NVFS	T4020 - T4030 Deluxe	53 - 8
		T4030 Deluxe, Japan	54 - 10
		T4040 - T4050 Deluxe	55 - 10
47131909	TNFA	TN75FA (VSN included)	44 - 10
		TN85FA - TN95FA (VSN included)	45 - 10
	T4000 NVFS	T4020 - T4030 Deluxe	53 - 9
		T4030 Deluxe, Japan	54 - 11
		T4040 - T4050 Deluxe	55 - 11
47137321	TNF	TN70F-TN75F-TN80F	40 - 7
		TN90F-TN95F	41 - 7
47548101	TS	TS90 Before Engine Serial Number 139306	73 - 6
		TS100-TS110 Before Engine Serial Number 139306	74 - 4
		TS115 Before Engine Serial Number 139306	75 - 4
82012057	M/60	8160-8260	105 - 2
		8360-8560	106 - 2
		M100-M115	107 - 2
		M135-M160	108 - 2
82014824	TS	TS90 After Engine Serial Number 139307	76 - 6
		TS100-TS110 After Engine Serial Number 139307	77 - 4
		TS115 After Engine Serial Number 139307	78 - 4
82018373	TS	TS90 Before Engine Serial Number 139306	73 - 8
		TS100-TS110 Before Engine Serial Number 139306	74 - 6
		TS115 Before Engine Serial Number 139306	75 - 6
		TS90 After Engine Serial Number 139307	76 - 8
		TS100-TS110 After Engine Serial Number 139307	77 - 6
		TS115 After Engine Serial Number 139307	78 - 6
	TM1	TM115	109 - 9
		TM125	110 - 9

Cabin Air

82018373	TM1	TM135 - TM150 - TM165	111 - 8
	TM2	TM120 - TM130 - TM140 - TM155 Before Serial Number ACM218235	112 - 9
		TM120 - TM130 - TM140 - TM155 After Serial Number ACM218236	113 - 9
	TM	TM175 - TM190 Before Serial Number ACM218235	120 - 10
		TM175 - TM190 After Serial Number ACM218236	121 - 10
82033107	TL	TL70 - TL80	67 - 10
		TL90 - TL100	68 - 10
	TLA	TL70A - TL80A - TL90A - TL100A Before Engine Serial Number 400031	69 - 7
		TL70A - TL80A - TL90A - TL100A After Engine Serial Number 400032	70 - 7
	T5000	T5030 - T5040 - T5050 - T5060 - T5070	71 - 9
	TS	TS90 Before Engine Serial Number 139306	73 - 7
		TS100-TS110 Before Engine Serial Number 139306	74 - 5
		TS115 Before Engine Serial Number 139306	75 - 5
		TS90 After Engine Serial Number 139307	76 - 7
		TS100-TS110 After Engine Serial Number 139307	77 - 5
		TS115 After Engine Serial Number 139307	78 - 5
	M/60	8160-8260	105 - 3
		8360-8560	106 - 3
		M100-M115	107 - 3
		M135-M160	108 - 3
	TM1	TM115	109 - 11
		TM125	110 - 11
		TM135 - TM150 - TM165	111 - 10
	TM2	TM120 - TM130 - TM140 - TM155 Before Serial Number ACM218235	112 - 11
		TM120 - TM130 - TM140 - TM155 After Serial Number ACM218236	113 - 11
	TM	TM175 - TM190 Before Serial Number ACM218235	120 - 12
		TM175 - TM190 After Serial Number ACM218236	121 - 12
84058793	CX8000	CX8040 - CX8050 - CX8060 - CX8070 CX8080	145 - 12
	CR	CR960	146 - 11
		CR980	147 - 12
		CR9060	148 - 10
		CR9080	149 - 10
		CR9060 Elevation	150 - 9
		CR9070 Elevation	151 - 9
		CR9080 - CR9090 Elevation	152 - 9
84459314	FR	FR9040 - FR9050 - FR9060 -FR9090	153 - 12
84572321	TNFA	TN75FA (VSN included)	44 - 8
		TN85FA - TN95FA (VSN included)	45 - 8
	T4000 NVFS	T4020 - T4030 Deluxe	53 - 10
		T4030 Deluxe, Japan	54 - 12
		T4040 - T4050 Deluxe	55 - 12
	TD4000F	T4030F - T4040F With CAB	60 - 7

Cabin Air

84572321	TD4000F	T4050F - T4060F With CAB	62 - 7
84577445	T5.XXX	T5.95 - T5.105 - T5.115	72 - 8
84579424	T5.XXX	T5.95 - T5.105 - T5.115	72 - 9
84607214	CSX	CSX7040 - CSX7050	142 - 3
	CX5/6000	CX5080 - CX5090 - CX6080	143 - 3
		CX6090	144 - 3
84807659	CSX	CSX7040 - CSX7050	142 - 4
	CX5/6000	CX5080 - CX5090 - CX6080	143 - 4
		CX6090	144 - 4
	FR	FR9040 - FR9050 - FR9060 -FR9090	153 - 13
87267363	TG	TG 210-TG230-TG255-TG285	135 - 5
	T8000	T8010-T8020-T8030-T8040-T8050 Before Serial Number Z8RW04134	136 - 2
		T8010-T8020-T8030-T8040-T8050 After Serial Number Z8RW04135	137 - 2
	T8.XXX	T8.275-T8.300-T8.330-T8.360-T8.390	138 - 12
87309516	TSA	TS100A - TS115A	79 - 9
		TS110A - TS125A	80 - 10
		TS135A	81 - 8
	T7SWB	T7.170 RCPC-T7.185 RCPC-T7.200 RCPC-T7.210 RCPC	132 - 8
		T7.170-T7.185-T7.200-T7.210	133 - 9
	T7LWB	T7.250 PC-T7.250 PC SW-T7.260 PC	134 - 12
87385322	TM1	TM115	109 - 10
		TM125	110 - 10
		TM135 - TM150 - TM165	111 - 9
	TM2	TM120 - TM130 - TM140 - TM155 Before Serial Number ACM218235	112 - 10
		TM120 - TM130 - TM140 - TM155 After Serial Number ACM218236	113 - 10
	TM	TM175 - TM190 Before Serial Number ACM218235	120 - 11
		TM175 - TM190 After Serial Number ACM218236	121 - 11
87413508	TG	TG 210-TG230-TG255-TG285	135 - 6
	T8000	T8010-T8020-T8030-T8040-T8050 Before Serial Number Z8RW04134	136 - 6
		T8010-T8020-T8030-T8040-T8050 After Serial Number Z8RW04135	137 - 6
	T8.XXX	T8.275-T8.300-T8.330-T8.360-T8.390	138 - 2
87558895	CSX	CSX7040 - CSX7050	142 - 4
	CX5/6000	CX5080 - CX5090 - CX6080	143 - 4
		CX6090	144 - 4
	FR	FR9040 - FR9050 - FR9060 -FR9090	153 - 13
87574476	TDD	TD60D - TD80D Before Date 05/09/09	56 - 10
		TD60D - TD80D After Date 05/09/09	57 - 10
		TD70D - TD90D - TD95D Before Date 05/09/09	58 - 10
		TD70D - TD90D - TD95D After Date 05/09/09	59 - 10
	TD5000	TD5010-TD5020-TD5030	64 - 8
		TD5040-TD5050	65 - 8
		TD5030-TD5040 Japan Market	66 - 8
87603874	TDD	TD60D - TD80D Before Date 05/09/09	56 - 9
		TD60D - TD80D After Date 05/09/09	57 - 9
		TD70D - TD90D - TD95D Before Date 05/09/09	58 - 9
		TD70D - TD90D - TD95D After Date 05/09/09	59 - 9

Cabin Air

87603874	TD5000	TD5010-TD5020-TD5030	64 - 7
		TD5040-TD5050	65 - 7
		TD5030-TD5040 Japan Market	66 - 7
87682993	CX8000	CX8040 - CX8050 - CX8060 - CX8070 CX8080	145 - 11
87684088	TG	TG 210-TG230-TG255-TG285	135 - 5
	T8000	T8010-T8020-T8030-T8040-T8050 Before Serial Number Z8RW04134	136 - 2
		T8010-T8020-T8030-T8040-T8050 After Serial Number Z8RW04135	137 - 2
	T8.XXX	T8.275-T8.300-T8.330-T8.360-T8.390	138 - 12
87726675	TSA	TS100A -TS115A	79 - 9
		TS110A -TS125A	80 - 10
		TS135A	81 - 8
		TS100A -TS110A Standard	82 - 8
		TS115A -TS130A Standard	83 - 8
	T6000	T6010-T6020 Plus Version Before Serial Number 710158	88 - 1
		T6010-T6020 Plus Version After Serial Number 710159	89 - 1
		T6030-T6050-T6070 Plus Version Before Serial Number 710158	90 - 1
		T6030-T6050-T6070 Plus Version After Serial Number 710159	91 - 1
		T6050 Plus Version Before Serial Number 710158 Without Cab	92 - 1
		T6050 Plus Version After Serial Number 710159 Without Cab	93 - 1
		T6050 Plus Version After 1/12/2009 Without Cab	94 - 1
		T6010-T6020 Plus Version Before 1/12/2009 With Cab	95 - 1
		T6010-T6020 Plus Version After 1/12/2009 With Cab	96 - 1
		T6030-T6050-T6070 Plus Version Before 1/12/2009 With Cab	97 - 1
		T6030-T6050-T6070 Plus Version After 1/12/2009 With Cab	98 - 1
		T6020-T6040-T6060 Elite Version Before Serial Number 710158	99 - 1
		T6020-T6040-T6060 Elite Version After Serial Number 710159	100 - 1
		T6020-T6040-T6060 Elite Version After 1/12/2009	101 - 2
		T6030-T6050-T6070 Elite Version Before Serial Number 710158	102 - 1
		T6030-T6050-T6070 Elite Version After Serial Number 710159	103 - 1
		T6030-T6050-T6070 Elite Version After 1/12/2009	104 - 1
	T6000 RCPC	T6030 RCPC-T6050 RCPC T6070 RCPC-T6080 RCPC-T6090 RCPC Before Serial Number 710158	114 - 1
		T6030 RCPC-T6050 RCPC T6070 RCPC-T6080 RCPC-T6090 RCPC After Serial Number 710159	115 - 1
		T6030E-T6050E-T6070E-T6080E Before Serial Number 710158	116 - 1
		T6030E-T6050E-T6070E-T6080E After Serial Number 710159	117 - 1
	T6.XXX	T6.120-T6.140	118 - 6
		T6.155-T6.165-T6.175	119 - 6
	T7500	T7510 -T7520 -T7530 -T7540 -T7550	123 - 11

Cabin Air

87726675	T7000	T7030-T7040-T7050-T7060 Before Serial Number 710158	124 - 9
		T7030-T7040-T7050-T7060 After Serial Number 710159	125 - 9
	T7000SW	T7030 -T7040 -T7050 -T7060 Before Serial Number 710158	126 - 8
		T7030 -T7040 -T7050 -T7060 After Serial Number 710159	127 - 8
	T7000AC	T7030 -T7040 -T7050 -TV7070 Before Serial Number 710158	128 - 2
		T7030 -T7040 -T7050 -TV7070 After Serial Number 710159	129 - 2
		T7030 -T7040 -T7050 -TV7070 After Date (14/09/2010)	130 - 2
	T7.XXXAC	T7.220 AC-T7.235 AC-T7.250 AC T7.270 AC	131 - 11
	T7SWB	T7.170 RCPC-T7.185 RCPC-T7.200 RCPC-T7.210 RCPC	132 - 10
		T7.170-T7.185-T7.200-T7.210	133 - 12
	T7LWB	T7.250 PC-T7.250 PC SW-T7.260 PC	134 - 10
87726695	TSA	TS100A -TS115A	79 - 11
		TS110A -TS125A	80 - 12
		TS135A	81 - 10
		TS100A -TS110A Standard	82 - 9
		TS115A -TS130A Standard	83 - 9
	T6000	T6010-T6020 Delta Version Before Serial Number 710158	84 - 1
		T6010-T6020 Delta Version After Serial Number 710159	85 - 1
		T6030-T6050 Delta Version Before Serial Number 710158	86 - 1
		T6030-T6050 Delta Version After Serial Number 710159	87 - 1
	T6.XXX	T6.120-T6.140	118 - 6
		T6.155-T6.165-T6.175	119 - 6
87726699	TSA	TS100A -TS115A	79 - 10
		TS110A -TS125A	80 - 11
		TS135A	81 - 9
		TS100A -TS110A Standard	82 - 10
		TS115A -TS130A Standard	83 - 10
	T6000	T6010-T6020 Delta Version Before Serial Number 710158	84 - 2
		T6010-T6020 Delta Version After Serial Number 710159	85 - 2
		T6030-T6050 Delta Version Before Serial Number 710158	86 - 2
		T6030-T6050 Delta Version After Serial Number 710159	87 - 2
		T6010-T6020 Plus Version Before Serial Number 710158	88 - 2
		T6010-T6020 Plus Version After Serial Number 710159	89 - 2
		T6030-T6050-T6070 Plus Version Before Serial Number 710158	90 - 2
		T6030-T6050-T6070 Plus Version After Serial Number 710159	91 - 2
		T6050 Plus Version Before Serial Number 710158 Without Cab	92 - 2
		T6050 Plus Version After Serial Number 710159 Without Cab	93 - 2
		T6050 Plus Version After 1/12/2009 Without Cab	94 - 2

Cabin Air

87726699	T6000	T6010-T6020 Plus Version Before 1/12/2009 With Cab	95 - 2
		T6010-T6020 Plus Version After 1/12/2009 With Cab	96 - 2
		T6030-T6050-T6070 Plus Version Before 1/12/2009 With Cab	97 - 2
		T6030-T6050-T6070 Plus Version After 1/12/2009 With Cab	98 - 2
		T6020-T6040-T6060 Elite Version Before Serial Number 710158	99 - 2
		T6020-T6040-T6060 Elite Version After Serial Number 710159	100 - 2
		T6020-T6040-T6060 Elite Version After 1/12/2009	101 - 3
		T6030-T6050-T6070 Elite Version Before Serial Number 710158	102 - 2
		T6030-T6050-T6070 Elite Version After Serial Number 710159	103 - 2
		T6030-T6050-T6070 Elite Version After 1/12/2009	104 - 2
	T6000 RCPC	T6030 RCPC-T6050 RCPC T6070 RCPC-T6080 RCPC-T6090 RCPC Before Serial Number 710158	114 - 2
		T6030 RCPC-T6050 RCPC T6070 RCPC-T6080 RCPC-T6090 RCPC After Serial Number 710159	115 - 2
		T6030E-T6050E-T6070E-T6080E Before Serial Number 710158	116 - 2
		T6030E-T6050E-T6070E-T6080E After Serial Number 710159	117 - 2
	T6.XXX	T6.120-T6.140	118 - 7
		T6.155-T6.165-T6.175	119 - 7
	T7500	T7510 - T7520 - T7530 - T7540 - T7550	123 - 12
	T7000	T7030-T7040-T7050-T7060 Before Serial Number 710158	124 - 10
		T7030-T7040-T7050-T7060 After Serial Number 710159	125 - 10
	T7000SW	T7030 -T7040 -T7050 -T7060 Before Serial Number 710158	126 - 9
		T7030 -T7040 -T7050 -T7060 After Serial Number 710159	127 - 9
	T7000AC	T7030 -T7040 -T7050 -TV7070 Before Serial Number 710158	128 - 3
		T7030 -T7040 -T7050 -TV7070 After Serial Number 710159	129 - 3
		T7030 -T7040 -T7050 -TV7070 After Date (14/09/2010)	130 - 3
	T7.XXXAC	T7.220 AC-T7.235 AC-T7.250 AC T7.270 AC	131 - 12
	T7SWB	T7.170 RCPC-T7.185 RCPC-T7.200 RCPC-T7.210 RCPC	132 - 11
		T7.170-T7.185-T7.200-T7.210	133 - 13
	T7LWB	T7.250 PC-T7.250 PC SW-T7.260 PC	134 - 11
89594075	TC	AL59	139 - 7
		TC52 - TC54 - TC56	140 - 7
	TC5000	TC5040 - TC5050 - TC5060 - TC5070 TC5080	141 - 6
1-34-584-630	TVT	TVT135 - TVT 155 - TVT170 - TVT190 TVT 195	122 - 1
	T7500	T7510 - T7520 - T7530 - T7540 - T7550	123 - 2
1-34-684-036	TVT	TVT135 - TVT 155 - TVT170 - TVT190 TVT 195	122 - 2

How to use your filter catalogue

Comment utiliser votre catalogue de filtres ?

Aufbau des Filterkatalogs

Come utilizzare il catalogo filtri?

Hvordan anvendes filterkataloget?

¿Cómo usar el catálogo de filtros?

Como usar o catálogo de filtros?

Hoe uw filtercatalogus te gebruiken?

Jak korzystać z katalogu filtrów?

Как пользоваться каталогом фильтров?

كيفية استخدام كتالوج الفلتر الخاص ب

a - Information presented in charts

Pictogram related to filter type
Filter part number
Filter technical detail
Quantity of product present on the machine (if non written assume one)
Machine picture page number
Corresponding product number on the schema

	Oil		Fuel		Engine Air		Hydraulic		Cabin Air	
M/60										
M100 **M115** With CAB	**81879134**	22-4	**87840591 x 2** Fuel/Water Separator	22-9	**82008600** Main	22-7	**84248043** Hydraulic Pump, Primary	22-5	**82012057 x 2** Heater	22-2
			87802332 Fuel/Water Separator	22-9	**82008601** Safety	22-8	**84226258** Hydraulic Pump, Secondary	22-6	**82033107 x 2** Foam	22-3
			87840590	22-10	**87394887** Main, with Pre-Cleaner	22-7	**47365582** Hydraulic System	22-1	**5196842 x 2** Air conditioning	22-2
					82014794 Safety, with Pre-Cleaner	22-8				

b - Pictogram index

	Engine oil filter
	Fuel filter
	Air filter
	Hydraulic filter
	Cabin filter

CNH Industrial EMEA Parts & Service 2014
Every effort has been made to ensure the information contained in this catalogue is correct at the time of print.
Drawings and photos are not contractual.

a - Informations présentées dans les tableaux

Pictogramme de type de filtre
Référence du filtre
Détails techniques du filtre
Quantité présente sur la machine (si non indiquée, utiliser 1)
Numéro de page de l'illustration de la machine
Numéro correspondant au produit sur le schéma

	Oil		Fuel		Engine Air		Hydraulic		Cabin Air	
M/60										
M100 **M115** With CAB	**81879134**	22-4	**87840591 x 2** Fuel/Water Separator	22-9	**82008600** Main	22-7	**84248043** Hydraulic Pump, Primary	22-5	**82012057 x 2** Heater	22-2
			87802332 Fuel/Water Separator	22-9	**82008601** Safety	22-8	**84226258** Hydraulic Pump, Secondary	22-6	**82033107 x 2** Foam	22-3
			87840590	22-10	**87394887** Main, with Pre-Cleaner	22-7	**47365582** Hydraulic System	22-1	**5196842 x 2** Air conditioning	22-2
					82014794 Safety, with Pre-Cleaner	22-8				

b - Index des pictogrammes

	Engine oil filter	Filtre à huile moteur
	Fuel filter	Filtre à carburant
	Air filter	Filtre à air
	Hydraulic filter	Filtre hydraulique
	Cabin filter	Filtre d'habitacle

CNH Industrial EMEA Parts & Service 2014
Tous les efforts ont été mis en œuvre pour s'assurer que les informations présentes dans le catalogue soient correctes au moment de l'impression.
Les dessins et images ne sont pas contractuels.

c- Détails techniques

Activated Carbon	Charbon actif
After Date ###	Après la date ###
After Serial Number ###	Après le numéro de série ###
Air conditioning (A/C)	Climatisation (A/C)
Air Duct	Conduit d'air
Air Intake	Admission d'air
Air louver	Déflecteur d'air
Anti-pollen	Antipollen
Auxliary Pump	Pompe auxiliaire
Before Date ###	Avant la date ###
Before Serial Number ###	Avant le numéro de série ###
Bio Diesel	Biodiesel
Blower	Pulseur
Cab /Fender mounted	Montage cabine / sur garde-boue
Cartridge	Cartouche
Charge Pump	Pompe de charge
Control system	Système de commande
Delivery Pipe	Conduite de refoulement
Diesel particulate	Particules diesel
Fan	Ventilateur
Fine dust	Poussière fine
Foam	Mousse
Front Axle	Pont avant
Fuel Sedimenting Device	Dispositif de sédimentation de carburant
Fuel system with one / two filter	Circuit d'alimentation en carburant à 1 / 2 filtre(s)
Gearbox	Boîte de vitesse
Heat exchanger	Échangeur thermique
Heater	Radiateur
High/ low pressure system	Système haute/basse pression
Hydraulic Pump	Pompe hydraulique

Hydrostatic Steering	Direction hydrostatique
Injection	Injection
Inline	En ligne
Inner/ Outer	Interne / Externe
Long /Short	Long/Court
Lube line	Conduite d'huile
Main	Principal
Oil bath	Bain d'huile
Oil cooler	Refroidisseur d'huile
Power steering	Direction assistée
Pre-Cleaner	Préfiltre
Primary /Secondary	Primaire/Secondaire
Recirculation	Recyclage
Regulated Valve	Soupape régulée
Return Pipe	Conduite de retour
Roof with Low Profile/High Profile	Toit à profil bas/profil haut
Safety	Sécurité
Self Cleaning	Autonettoyant
Sensor	Capteur
Separator Fuel/Water	Séparateur carburant/eau
Severe duty	Usage intensif
Standard	Standard
Steering direction servocontrol	Servocommande de direction assistée
Tank	Réservoir
Tank strainer	Crépine de réservoir
Transmission	Transmission
Vehicles made in UK / Austria	Véhicules fabriqués au R.-U. / en Autriche
With CAB	Avec cabine
With dust ejector	Avec éjecteur de poussière
Without CAB	Sans cabine

a - Angaben in den Tabellen

Piktogramm des Filtertyps
Teilenummer des Filters
Technische Daten des Filters
Anzahl an Filtern in der Maschine (falls keine Zahl angegeben ist, wird 1 Filter benötigt)
Abbildung der Maschine (Seitenzahl)
Zugehörige Produktnummer im Schema

	Oil		Fuel		Engine Air		Hydraulic		Cabin Air	
M/60										
M100 **M115** With CAB	**81879134**	22-4	**87840591 x 2** Fuel/Water Separator	22-9	**82008600** Main	22-7	**84248043** Hydraulic Pump, Primary	22-5	**82012057 x 2** Heater	22-2
			87802332 Fuel/Water Separator	22-9	**82008601** Safety	22-8	**84226258** Hydraulic Pump, Secondary	22-6	**82033107 x 2** Foam	22-3
			87840590	22-10	**87394887** Main, with Pre-Cleaner	22-7	**47365582** Hydraulic System	22-1	**5196842 x 2** Air conditioning	22-2
					82014794 Safety, with Pre-Cleaner	22-8				

b - Piktogrammindex

	Engine oil filter	Motorölfilter
	Fuel filter	Kraftstofffilter
	Air filter	Luftfilter
	Hydraulic filter	Hydraulikfilter
	Cabin filter	Kabinenfilter

CNH Industrial EMEA Parts & Service 2014
Änderungen und Irrtümer vorbehalten.
Die gezeigten Abbildungen sind nicht verbindlich.

c - Technische Daten

Activated Carbon	Aktivkohle
After Date ###	Ab ###
After Serial Number ###	Ab Seriennummer ###
Air conditioning (A/C)	Klimaanlage
Air Duct	Lüftungskanal
Air Intake	Lufteinlass
Air louver	Lüftungsgitter
Anti-pollen	Pollenschutz
Auxliary Pump	Zusatzpumpe
Before Date ###	Bis ###
Before Serial Number ###	Bis Seriennummer ###
Bio Diesel	Biodiesel
Blower	Gebläse
Cab /Fender mounted	In Kabine/an Kotflügel montiert
Cartridge	Kartusche
Charge Pump	Ladepumpe
Control system	Steuersystem
Delivery Pipe	Zulaufleitung
Diesel particulate	Dieselpartikel
Fan	Lüfter
Fine dust	Feinstaub
Foam	Schaumstoff
Front Axle	Vorderachse
Fuel Sedimenting Device	Kraftstoffschmutzabscheider
Fuel system with one / two filter	Kraftstoffsystem mit ein / zwei Filtern
Gearbox	Schaltgetriebe
Heat exchanger	Wärmetauscher
Heater	Heizung
High/ low pressure system	Hoch-/Niederdrucksystem
Hydraulic Pump	Hydraulikpumpe

Hydrostatic Steering	Hydrostatische Lenkung
Injection	Einspritzung
Inline	Leitungsfilter
Inner/ Outer	Innen/Außen
Long /Short	Lang/Kurz
Lube line	Schmierölleitung
Main	Hauptfilter
Oil bath	Ölbad
Oil cooler	Ölkühler
Power steering	Servolenkung
Pre-Cleaner	Vorfilter
Primary /Secondary	Primär/Sekundär
Recirculation	Umluft
Regulated Valve	Regelventil
Return Pipe	Rücklaufleitung
Roof with Low Profile/High Profile	Dach niedrig/hoch
Safety	Sicherheitsfilter
Self Cleaning	Selbstreinigend
Sensor	Sensor
Separator Fuel/Water	Kraftstoff-/Wasserabscheider
Severe duty	Hochleistung
Standard	Standard
Steering direction servocontrol	Lenkrichtung Servosystem
Tank	Kraftstofftank
Tank strainer	Einfüllsieb
Transmission	Triebwerk
Vehicles made in UK / Austria	Fahrzeuge, gefertigt in UK/Österreich
With CAB	Mit Kabine
With dust ejector	Mit Staubaustragung
Without CAB	Ohne Kabine

a - Informazioni presenti nei prospetti

Pittogramma relativo al tipo di filtro
Codice del filtro
Dettaglio tecnico del filtro
Quantità di prodotto presente sulla macchina (se non indicata, presupporre uno)
Numero di pagina relativa all'immagine della macchina
Numero corrispondente al prodotto sullo schema

	Oil		Fuel		Engine Air		Hydraulic		Cabin Air	
M/60										
M100 **M115** With CAB	**81879134**	22-4	**87840591 x 2** Fuel/Water Separator	22-9	**82008600** Main	22-7	**84248043** Hydraulic Pump, Primary	22-5	**82012057 x 2** Heater	22-2
			87802332 Fuel/Water Separator	22-9	**82008601** Safety	22-8	**84226258** Hydraulic Pump, Secondary	22-6	**82033107 x 2** Foam	22-3
			87840590	22-10	**87394887** Main, with Pre-Cleaner	22-7	**47365582** Hydraulic System	22-1	**5196842 x 2** Air conditioning	22-2
					82014794 Safety, with Pre-Cleaner	22-8				

b - Indice pittogrammi

	Engine oil filter	Filtro olio motore
	Fuel filter	Filtro combustibile
	Air filter	Filtro aria
	Hydraulic filter	Filtro idraulico
	Cabin filter	Filtro abitacolo

CNH Industrial EMEA Parts & Service 2014
Le informazioni contenute nel catalogo sono aggiornate alla data di stampa
Le immagini e le foto sono a titolo indicativo

c - Dettagli tecnici

Activated Carbon	A carboni attivi
After Date ###	Dopo la data ###
After Serial Number ###	Dopo il numero di serie ###
Air conditioning (A/C)	Aria condizionata (A/C)
Air Duct	Condotto aria
Air Intake	Presa d'aria
Air louver	Feritoie di ventilazione aria
Anti-pollen	Antipolline
Auxliary Pump	Pompa ausiliaria
Before Date ###	Prima della data ###
Before Serial Number ###	Prima del numero di serie ###
Bio Diesel	Biodiesel
Blower	Ventilatore
Cab /Fender mounted	Montaggio cabina/parafango
Cartridge	Cartuccia
Charge Pump	Pompa di carica
Control system	Sistema di controllo
Delivery Pipe	Tubo di mandata
Diesel particulate	Antiparticolato diesel
Fan	Ventilatore
Fine dust	Polvere fine
Foam	Materiale espanso
Front Axle	Assale anteriore
Fuel Sedimenting Device	Dispositivo di sedimentazione combustibile
Fuel system with one / two filter	Impianto di alimentazione con 1/2 filtri
Gearbox	Cambio
Heat exchanger	Scambiatore di calore
Heater	Riscaldatore
High/ low pressure system	Sistema ad alta/bassa pressione
Hydraulic Pump	Pompa idraulica

Hydrostatic Steering	Sterzo idrostatico
Injection	Iniezione
Inline	In linea
Inner/ Outer	Interno/Esterno
Long /Short	Lungo/Corto
Lube line	Linea lubrificante
Main	Principale
Oil bath	Bagno d'olio
Oil cooler	Radiatore dell'olio
Power steering	Servosterzo
Pre-Cleaner	Prefiltro
Primary /Secondary	Primario/Secondario
Recirculation	Ricircolo
Regulated Valve	Valvola regolata
Return Pipe	Tubo di ritorno
Roof with Low Profile/High Profile	Tetto con profilo basso/alto
Safety	Di sicurezza
Self Cleaning	Autopulente
Sensor	Sensore
Separator Fuel/Water	Separatore combustibile/acqua
Severe duty	Impiego gravoso
Standard	Standard
Steering direction servocontrol	Servocomando di direzione sterzo
Tank	Serbatoio
Tank strainer	Filtro serbatoio
Transmission	Trasmissione
Vehicles made in UK / Austria	Veicoli fabbricati nel Regno Unito/in Austria
With CAB	Con cabina
With dust ejector	Con eiettore polveri
Without CAB	Senza cabina

a - Information i oversigterne

Piktogram vedr. filtertype
Varenummer
Teknisk information
Styk-antal på maskinen (vælg et, hvis ingen anført)
Sidenummer med maskinbillede
Tilsvarende produktnummer i skemaet

	Oil		Fuel		Engine Air		Hydraulic		Cabin Air	
M/60										
M100 **M115** With CAB	**81879134**	22-4	**87840591 x 2** Fuel/Water Separator	22-9	**82008600** Main	22-7	**84248043** Hydraulic Pump, Primary	22-5	**82012057 x 2** Heater	22-2
			87802332 Fuel/Water Separator	22-9	**82008601** Safety	22-8	**84226258** Hydraulic Pump, Secondary	22-6	**82033107 x 2** Foam	22-3
			87840590	22-10	**87394887** Main, with Pre-Cleaner	22-7	**47365582** Hydraulic System	22-1	**5196842 x 2** Air conditioning	22-2
					82014794 Safety, with Pre-Cleaner	22-8				

b - Piktogram indeks

	Engine oil filter	Oliefilter til motor
	Fuel filter	Brændstoffilter
	Air filter	Luftfilter
	Hydraulic filter	Hydraulikfilter
	Cabin filter	Kabinefilter

CNH Industrial EMEA Parts & Service 2014
Produceret med forbehold for ændringer i information foretaget efter tryk.
Illustrationer er kun til illustrative formål og kan afvige fra det virkelige produkt eller applikation.

c - Tekniske detaljer

Activated Carbon	Actieve kool
After Date ###	Na Datum ###
After Serial Number ###	Na Serienummer ###
Air conditioning (A/C)	Airconditioning (A/C)
Air Duct	Luchtpijp
Air Intake	Luchtinlaat
Air louver	Ventilatieklep
Anti-pollen	Anti-pollen
Auxliary Pump	Hulppomp
Before Date ###	Voor Datum ###
Before Serial Number ###	Voor Serienummer ###
Bio Diesel	Bio Diesel
Blower	Blazer
Cab /Fender mounted	Cabine/Stootrand gemonteerd
Cartridge	Patroon
Charge Pump	Laadpomp
Control system	Controlesysteem
Delivery Pipe	Toevoerleiding
Diesel particulate	Dieselroet
Fan	Ventilator
Fine dust	Fijn stof
Foam	Schuim
Front Axle	Vooras
Fuel Sedimenting Device	Brandstofafzet inrichting
Fuel system with one / two filter	Brandstofsysteem met een / twee filters
Gearbox	Versnellingsbak
Heat exchanger	Warmtewisselaar
Heater	Verwarmer
High/ low pressure system	Hoge/ lage druk systeem
Hydraulic Pump	Hydraulische pomp
Hydrostatic Steering	Hydrostatische stuurinrichting

Injection	Injectie
Inline	In lijn
Inner/ Outer	Binnen/Buiten
Long /Short	Lang/Kort
Lube line	Smeerlijn
Main	Hoofdfilter
Oil bath	Oliebad
Oil cooler	Oliekoeler
Power steering	Stuurbekrachtiging
Pre-Cleaner	Voorfilter
Primary /Secondary	Primair/Secundair
Recirculation	Recirculatie
Regulated Valve	Gestuurde klep
Return Pipe	Retourleiding
Roof with Low Profile/High Profile	Dak met laag profiel/hoog profiel
Safety	Veiligheid
Self Cleaning	Zelfreinigend
Sensor	Sensor
Separator Fuel/Water	Brandstof/water afscheider
Severe duty	Zwaar werk
Standard	Standaard
Steering direction servocontrol	Richting servobesturing stuurinrichting
Tank	Tank
Tank strainer	Tankfilter
Transmission	Transmissie
Vehicles made in UK / Austria	Voertuigen vervaardigd in het Verenigd Koninkrijk / Oostenrijk
With CAB	Met CAB
With dust ejector	Met stofuitwerpsysteem
Without CAB	Zonder CAB

a - Información mostrada en las tablas

Pictograma indicativo del tipo de filtro
Referencia del filtro
Datos técnicos del filtro
Cantidad de producto presente en la máquina (si no se indica, use 1)
Número de la página donde aparece la imagen de la máquina
Número de producto correspondiente en el esquema

	Oil		Fuel		Engine Air		Hydraulic		Cabin Air	
M/60										
M100 **M115** With CAB	**81879134**	22-4	**87840591 x 2** Fuel/Water Separator	22-9	**82008600** Main	22-7	**84248043** Hydraulic Pump, Primary	22-5	**82012057 x 2** Heater	22-2
			87802332 Fuel/Water Separator	22-9	**82008601** Safety	22-8	**84226258** Hydraulic Pump, Secondary	22-6	**82033107 x 2** Foam	22-3
			87840590	22-10	**87394887** Main, with Pre-Cleaner	22-7	**47365582** Hydraulic System	22-1	**5196842 x 2** Air conditioning	22-2
					82014794 Safety, with Pre-Cleaner	22-8				

b - Índice gráfico

	Engine oil filter	Filtro de aceite de motor
	Fuel filter	Filtro de combustible
	Air filter	Filtro de aire
	Hydraulic filter	Filtro hidráulico
	Cabin filter	Filtro de cabina

CNH Industrial EMEA Parts & Service 2014
Hemos realizado todo el esfuerzo posible para asegurarle que la información contenida en este catálogo es correcta en el momento de la impresión.
Los dibujos y las fotos no son contractuales.

c - Datos técnicos

Activated Carbon	Carbón activo
After Date ###	Después de fecha ###
After Serial Number ###	Después del número de serie ###
Air conditioning (A/C)	Aire acondicionado (A/A)
Air Duct	Conducto de aire
Air Intake	Admisión de aire
Air louver	Rejilla de ventilación
Anti-pollen	Antipolen
Auxliary Pump	Bomba auxiliar
Before Date ###	Antes de fecha ###
Before Serial Number ###	Antes de número de serie ###
Bio Diesel	Biodiésel
Blower	Sopladora
Cab /Fender mounted	Montado en cabina / guardabarros
Cartridge	Cartucho
Charge Pump	Bomba de carga
Control system	Sistema de control
Delivery Pipe	Tubo de suministro
Diesel particulate	Partículas diésel
Fan	Ventilador
Fine dust	Polvo fino
Foam	Espuma
Front Axle	Eje delantero
Fuel Sedimenting Device	Dispositivo de sedimentación de combustible
Fuel system with one / two filter	Circuito de combustible con 1 / 2 filtros
Gearbox	Caja de cambios
Heat exchanger	Intercambiador de calor
Heater	Calentador
High/ low pressure system	Sistema de alta/baja presión
Hydraulic Pump	Bomba hidráulica

Hydrostatic Steering	Dirección hidrostática
Injection	Inyección
Inline	En línea
Inner/ Outer	Interno / Externo
Long /Short	Largo / Corto
Lube line	Conducto de lubricantes
Main	Principal
Oil bath	Baño de aceite
Oil cooler	Radiador de aceite
Power steering	Dirección asistida
Pre-Cleaner	Prefiltro
Primary /Secondary	Principal / Secundario
Recirculation	Reciclaje
Regulated Valve	Válvula regulada
Return Pipe	Tubo de retorno
Roof with Low Profile/High Profile	Techo de perfil bajo/perfil alto
Safety	Seguridad
Self Cleaning	Autolimpiable
Sensor	Sensor
Separator Fuel/Water	Separador de combustible/agua
Severe duty	Trabajo intenso
Standard	Estándar
Steering direction servocontrol	Servocontrol de dirección asistida
Tank	Depósito
Tank strainer	Tamiz de depósito
Transmission	Transmisión
Vehicles made in UK / Austria	Vehículos fabricados en Reino Unido / Austria
With CAB	Con cabina
With dust ejector	Con expulsor de polvo
Without CAB	Sin cabina

a - Informação apresentada nas tabelas

Pictograma relativo ao tipo de filtro
Número de peça do filtro
Detalhe técnico do filtro
Quantidade de produto presente na máquina (se nenhum indicado escolha um)
Número da página da imagem da máquina
Respectivo número de produto no esquema

	Oil		Fuel		Engine Air		Hydraulic		Cabin Air	
M/60										
M100 **M115** With CAB	**81879134**	22-4	**87840591 x 2** Fuel/Water Separator	22-9	**82008600** Main	22-7	**84248043** Hydraulic Pump, Primary	22-5	**82012057 x 2** Heater	22-2
			87802332 Fuel/Water Separator	22-9	**82008601** Safety	22-8	**84226258** Hydraulic Pump, Secondary	22-6	**82033107 x 2** Foam	22-3
			87840590	22-10	**87394887** Main, with Pre-Cleaner	22-7	**47365582** Hydraulic System	22-1	**5196842 x 2** Air conditioning	22-2
					82014794 Safety, with Pre-Cleaner	22-8				

b - Índice de pictogramas

	Engine oil filter	Filtro de Óleo do Motor
	Fuel filter	Filtro de combustível
	Air filter	Filtro de ar
	Hydraulic filter	Filtro Hidráulico
	Cabin filter	Filtro da cabine

CNH Industrial EMEA Parts & Service 2014
Todos os esforços foram feitos para garantir que a informação do catálogo seja correcta no momento da sua impressão.
Desenhos e fotos não são contractuais.

c - Detalhes técnicos

Activated Carbon	Carvão activado
After Date ###	Após a data ###
After Serial Number ###	Após o número de série ###
Air conditioning (A/C)	Ar condicionado (A/C)
Air Duct	Conduta do ar
Air Intake	Entrada de ar
Air louver	Registo de ar
Anti-pollen	Antipólen
Auxliary Pump	Bomba auxiliar
Before Date ###	Antes da data ###
Before Serial Number ###	Antes do número de série ###
Bio Diesel	Bio-diesel
Blower	Ventilador
Cab /Fender mounted	Cabina/Guarda-lamas montado
Cartridge	Cartucho
Charge Pump	Bomba de carga
Control system	Sistema de controlo
Delivery Pipe	Tubo de alimentação
Diesel particulate	Partículas diesel
Fan	Ventoinha
Fine dust	Pó fino
Foam	Espuma
Front Axle	Eixo dianteiro
Fuel Sedimenting Device	Dispositivo de sedimentação do combustível
Fuel system with one / two filter	Sistema de combustível com 1/2 filtros
Gearbox	Caixa de velocidades
Heat exchanger	Permutador de calor
Heater	Aquecedor
High/ low pressure system	Sistema de alta/baixa pressão
Hydraulic Pump	Bomba hidráulica

Hydrostatic Steering	Direcção hidrostática
Injection	Injecção
Inline	Em linha
Inner/ Outer	Interior/Exterior
Long /Short	Longo/Curto
Lube line	Linha de lubrificação
Main	Principal
Oil bath	Banho de óleo
Oil cooler	Radiador do óleo
Power steering	Direcção assistida
Pre-Cleaner	Pré-filtro
Primary /Secondary	Primário/Secundário
Recirculation	Recirculação
Regulated Valve	Válvula regulada
Return Pipe	Tubo de retorno
Roof with Low Profile/High Profile	Tecto com baixo perfil/alto perfil
Safety	Segurança
Self Cleaning	Autolimpeza
Sensor	Sensor
Separator Fuel/Water	Separador combustível/água
Severe duty	Serviço rigoroso
Standard	Standard
Steering direction servocontrol	Servocontrolo do sentido de direcção
Tank	Depósito
Tank strainer	Filtro do depósito
Transmission	Transmissão
Vehicles made in UK / Austria	Veículos fabricados no Reino Unido/Áustria
With CAB	Com CABINA
With dust ejector	Com ejector de pó
Without CAB	Sem CABINA

a - Informatie in de grafieken

Pictogram m.b.t. het type filter
Onderdeelnummer filter
Technische details filter
Aantal aanwezig op de machine (neem één exemplaar, tenzij anders vermeld)
Paginanummer machinefoto
Overeenkomstig productnummer op het schema

	Oil		Fuel		Engine Air		Hydraulic		Cabin Air	
M/60										
M100 **M115** With CAB	**81879134**	22-4	**87840591 x 2** Fuel/Water Separator	22-9	**82008600** Main	22-7	**84248043** Hydraulic Pump, Primary	22-5	**82012057 x 2** Heater	22-2
			87802332 Fuel/Water Separator	22-9	**82008601** Safety	22-8	**84226258** Hydraulic Pump, Secondary	22-6	**82033107 x 2** Foam	22-3
			87840590	22-10	**87394887** Main, with Pre-Cleaner	22-7	**47365582** Hydraulic System	22-1	**5196842 x 2** Air conditioning	22-2
					82014794 Safety, with Pre-Cleaner	22-8				

b - Pictogram index

	Engine oil filter	Motoroliefilter
	Fuel filter	Brandstoffilter
	Air filter	Luchtfilter
	Hydraulic filter	Hydraulische filter
	Cabin filter	Cabinefilter

CNH Industrial EMEA Parts & Service 2014
Alle inspanningen werden geleverd om ervoor te zorgen dat de informatie in deze catalogus correct is op het moment van druk.
Tekeningen en foto's zijn niet contractueel.

c - Technische gegevens

Activated Carbon	Actieve kool
After Date ###	Na Datum ###
After Serial Number ###	Na Serienummer ###
Air conditioning (A/C)	Airconditioning (A/C)
Air Duct	Luchtpijp
Air Intake	Luchtinlaat
Air louver	Ventilatieklep
Anti-pollen	Anti-pollen
Auxliary Pump	Hulppomp
Before Date ###	Voor Datum ###
Before Serial Number ###	Voor Serienummer ###
Bio Diesel	Bio Diesel
Blower	Blazer
Cab /Fender mounted	Cabine/Stootrand gemonteerd
Cartridge	Patroon
Charge Pump	Laadpomp
Control system	Controlesysteem
Delivery Pipe	Toevoerleiding
Diesel particulate	Dieselroet
Fan	Ventilator
Fine dust	Fijn stof
Foam	Schuim
Front Axle	Vooras
Fuel Sedimenting Device	Brandstofafzet inrichting
Fuel system with one / two filter	Brandstofsysteem met een / twee filters
Gearbox	Versnellingsbak
Heat exchanger	Warmtewisselaar
Heater	Verwarmer
High/ low pressure system	Hoge/ lage druk systeem
Hydraulic Pump	Hydraulische pomp
Hydrostatic Steering	Hydrostatische stuurinrichting

Injection	Injectie
Inline	In lijn
Inner/ Outer	Binnen/Buiten
Long /Short	Lang/Kort
Lube line	Smeerlijn
Main	Hoofdfilter
Oil bath	Oliebad
Oil cooler	Oliekoeler
Power steering	Stuurbekrachtiging
Pre-Cleaner	Voorfilter
Primary /Secondary	Primair/Secundair
Recirculation	Recirculatie
Regulated Valve	Gestuurde klep
Return Pipe	Retourleiding
Roof with Low Profile/High Profile	Dak met laag profiel/hoog profiel
Safety	Veiligheid
Self Cleaning	Zelfreinigend
Sensor	Sensor
Separator Fuel/Water	Brandstof/water afscheider
Severe duty	Zwaar werk
Standard	Standaard
Steering direction servocontrol	Stuurrichting servobesturing
Tank	Tank
Tank strainer	Tankfilter
Transmission	Transmissie
Vehicles made in UK / Austria	Voertuigen vervaardigd in het Verenigd Koninkrijk / Oostenrijk
With CAB	Met CAB
With dust ejector	Met stofuitwerpsysteem
Without CAB	Zonder CAB

a - Informacje podane w tabelach

Piktogram dotyczący typu filtra
Numer filtra
Dane techniczne filtra
Ilość produktów w maszynie (jeśli nie podano - przyjąć 1 szt.)
Numer strony z rysunkiem maszyny
Odpowiadający numer produktu na schemacie

	Oil		Fuel		Engine Air		Hydraulic		Cabin Air	
M/60										
M100 **M115** With CAB	**81879134**	22-4	**87840591 x 2** Fuel/Water Separator	22-9	**82008600** Main	22-7	**84248043** Hydraulic Pump, Primary	22-5	**82012057 x 2** Heater	22-2
			87802332 Fuel/Water Separator	22-9	**82008601** Safety	22-8	**84226258** Hydraulic Pump, Secondary	22-6	**82033107 x 2** Foam	22-3
			87840590	22-10	**87394887** Main, with Pre-Cleaner	22-7	**47365582** Hydraulic System	22-1	**5196842 x 2** Air conditioning	22-2
					82014794 Safety, with Pre-Cleaner	22-8				

b - Indeks piktogramów

	Engine oil filter	Filtr oleju silnikowego
	Fuel filter	Filtr paliwa
	Air filter	Filtr powietrza
	Hydraulic filter	Filtr hydrauliczny
	Cabin filter	Filtr kabinowy

CNH Industrial EMEA Parts & Service 2014
Dołożono wszelkich starań, aby informacje zawarte w tym katalogu były poprawne w momencie jego publikacji.
Zdjęcia i rysunki mają charakter poglądowy

c - Dane techniczne

Activated Carbon	Węgiel aktywny
After Date ###	Po dacie ###
After Serial Number ###	Po numerze seryjnym ###
Air conditioning (A/C)	Klimatyzacja (A/C)
Air Duct	Przewód powietrza
Air Intake	Wlot powietrza
Air louver	Żaluzja powietrza
Anti-pollen	Przeciwpyłkowy
Auxliary Pump	Pompa pomocnicza
Before Date ###	Przed datą ###
Before Serial Number ###	Przed numerem seryjnym ###
Bio Diesel	Bio diesel
Blower	Dmuchawa
Cab /Fender mounted	Zamontowana kabina / błotnik
Cartridge	Wkład
Charge Pump	Pompa ładująca
Control system	System sterowania
Delivery Pipe	Rura doprowadzająca
Diesel particulate	Cząstki stałe
Fan	Wentylator
Fine dust	Drobny pył
Foam	Piana
Front Axle	Oś przednia
Fuel Sedimenting Device	Układ sedymentacji paliwa
Fuel system with one / two filter	Układ paliwowy z jednym/dwoma filtrami
Gearbox	Przekładnia
Heat exchanger	Wymiennik ciepła
Heater	Grzałka
High/ low pressure system	Układ niskiego/wysokiego ciśnienia
Hydraulic Pump	Pompa hydrauliczna

Hydrostatic Steering	Sterowanie hydrostatyczne
Injection	Wtrysk
Inline	Wbudowany
Inner/ Outer	Wewnętrzny/Zewnętrzny
Long /Short	Długi/Krótki
Lube line	Przewód smarowania
Main	Główny
Oil bath	Kąpiel olejowa
Oil cooler	Chłodnica oleju
Power steering	Układ wspomagania
Pre-Cleaner	Filtr wstępny
Primary /Secondary	Pierwotny/Wtórny
Recirculation	Recyrkulacja
Regulated Valve	Zawór regulowany
Return Pipe	Rura powrotna
Roof with Low Profile/High Profile	Dach niskoprofilowy/wysokoprofilowy
Safety	Bezpieczeństwo
Self Cleaning	Samoczynne czyszczenie
Sensor	Czujnik
Separator Fuel/Water	Separator paliwa/wody
Severe duty	Do dużych obciążeń
Standard	Standard
Steering direction servocontrol	Serwosterowanie kierunkiem skrętu
Tank	Zbiornik
Tank strainer	Filtr zbiornika
Transmission	Przekładnia napędowa
Vehicles made in UK / Austria	Pojazdy wyprodukowane w UK / Austrii
With CAB	Z KABINĄ
With dust ejector	Z odpylaczem
Without CAB	Bez KABINY

a - Информация представлена в таблицах

Пиктограммы с обозначением типа фильтра
Номер детали для фильтра
Техническое данные фильтра
Кол-во изделий на одной машине (если не указано, заказывайте одно)
Номер страницы с изображением машины
Соответствующий номер изделия на схеме

	Oil		Fuel		Engine Air		Hydraulic		Cabin Air	
M/60										
M100 **M115** With CAB	**81879134**	22-4	**87840591 x 2** Fuel/Water Separator	22-9	**82008600** Main	22-7	**84248043** Hydraulic Pump, Primary	22-5	**82012057 x 2** Heater	22-2
			87802332 Fuel/Water Separator	22-9	**82008601** Safety	22-8	**84226258** Hydraulic Pump, Secondary	22-6	**82033107 x 2** Foam	22-3
			87840590	22-10	**87394887** Main, with Pre-Cleaner	22-7	**47365582** Hydraulic System	22-1	**5196842 x 2** Air conditioning	22-2
					82014794 Safety, with Pre-Cleaner	22-8				

b - Список пиктограмм

	Engine oil filter	Масляный фильтр двигателя
	Fuel filter	Топливный фильтр
	Air filter	Воздушный фильтр
	Hydraulic filter	Гидравлический фильтр
	Cabin filter	Воздушный фильтр кабины

CNH Industrial EMEA Parts & Service 2014
Были приложены все усилия для того, чтобы информация, содержащаяся в данном каталоге, была точна на момент выхода каталога.
Чертежи и фотографии не имеют авторских прав.

c - Технические данные

Activated Carbon	Активированный уголь
After Date ###	После даты ###
After Serial Number ###	После серийного номера ###
Air conditioning (A/C)	Кондиционирование воздуха (A/C)
Air Duct	Воздуховод
Air Intake	Воздухозабор
Air louver	Вентиляционные жалюзи
Anti-pollen	Защита от загрязнений
Auxliary Pump	Вспомогательный насос
Before Date ###	До даты ###
Before Serial Number ###	До серийного номера ###
Bio Diesel	Биодизельное топливо
Blower	Вентилятор
Cab /Fender mounted	Установка в кабине/на крыле
Cartridge	Фильтрующий элемент
Charge Pump	Нагнетательный насос
Control system	Система управления
Delivery Pipe	Нагнетательная трубка / Магистраль подачи
Diesel particulate	Отделение твердых частиц из дизельного топлива
Fan	Вентилятор
Fine dust	Фильтр для мелкодисперсной пыли
Foam	Пенный
Front Axle	Передняя ось / Передний мост
Fuel Sedimenting Device	Отстойник топлива
Fuel system with one / two filter	Топливная система с одним / двумя фильтрами
Gearbox	Коробка передач
Heat exchanger	Теплообменник
Heater	Нагреватель
High/ low pressure system	Система высокого/ низкого давления
Hydraulic Pump	Гидравлический насос

Hydrostatic Steering	Гидростатическое рулевое управление
Injection	Впрыск топлива
Inline	Встроенный в линию
Inner/ Outer	Внутренний/ наружный
Long /Short	Длинный /короткий
Lube line	Смазочный трубопровод / Смазочный контур
Main	Первичный
Oil bath	С масляной ванной
Oil cooler	Масляный радиатор
Power steering	Рулевое управление с гидроусилителем
Pre-Cleaner	Фильтр предварительной очистки
Primary /Secondary	Первичный /вторичный
Recirculation	Рециркуляционный
Regulated Valve	Регулируемый клапан
Return Pipe	Возвратная трубка / Магистраль слива
Roof with Low Profile/High Profile	Низкопрофильная/высокопрофильная крыша
Safety	Вторичный
Self Cleaning	Самоочищающийся
Sensor	Датчик
Separator Fuel/Water	Топливно-водяной сепаратор
Severe duty	Тяжелый режим эксплуатации
Standard	Стандартное исполнение
Steering direction servocontrol	Сервоуправление направлением поворота
Tank	Бак
Tank strainer	Фильтр бака
Transmission	Трансмиссия
Vehicles made in UK / Austria	Машины, изготовленные в Великобритании / Австрии
With CAB	С кабиной
With dust ejector	С пылеэжектором
Without CAB	Без кабины

أ/عرض للمعلومات في مخططات

الرسم التخطيطي المتعلق بنوع الفلتر
رقم قطعة الغيار الخاصة بالفلتر
التفاصيل التقنية للفلتر
كمية المنتج الموجودة بالماكينة (إن لم تكن واردة خذ واحدا)
صورة الماكينة رقم الصفحة
رقم المنتج المطابق في المخطط

	Oil		Fuel		Engine Air		Hydraulic		Cabin Air	
M/60										
M100 **M115** With CAB	**81879134**	22-4	**87840591 x 2** Fuel/Water Separator	22-9	**82008600** Main	22-7	**84248043** Hydraulic Pump, Primary	22-5	**82012057 x 2** Heater	22-2
			87802332 Fuel/Water Separator	22-9	**82008601** Safety	22-8	**84226258** Hydraulic Pump, Secondary	22-6	**82033107 x 2** Foam	22-3
			87840590	22-10	**87394887** Main, with Pre-Cleaner	22-7	**47365582** Hydraulic System	22-1	**5196842 x 2** Air conditioning	22-2
					82014794 Safety, with Pre-Cleaner	22-8				

ب/فهرس الرسم التخطيطي

	Engine oil filter	فلتر زيت المحرك
	Fuel filter	فلتر الوقود
	Air filter	فلتر الهواء
	Hydraulic filter	فلتر هيدروليكي
	Cabin filter	فلتر المقصورة

لقد تم بذل كل الجهد لضمان المعلومات الواردة في هذا
الكتالوج على إنها صحيحة عند وقت الطباعة.
الرسومات و الصور ليست متطابقة

ج /التفاصيل التقنية

	العربية		العربية
Activated Carbon	الكربون المنشط	Hydrostatic Steering	التوجيه الهيدروليكي
After Date ###	بعد تاريخ # # #	Injection	حقن
After Serial Number ###	بعد الرقم التسلسلي ###	Inline	على خط مستقيم
Air conditioning (A/C)	تكييف الهواء (المكيفات)	Inner/ Outer	الداخلي/الخارجي
Air Duct	مجرى الهواء	Long /Short	طويل/ قصيرء
Air Intake	مدخل الهواء	Lube line	خط المشحم
Air louver	كوة الهواء	Main	الرئيسية
Anti-pollen	مكافحة حبوب اللقاح	Oil bath	حمام زيت
Auxliary Pump	مضخة مساعدة	Oil cooler	مبرد الزيت
Before Date ###	قبل تاريخ # # #	Power steering	توجيه القدرة
Before Serial Number ###	قبل الرقم التسلسلي ###	Pre-Cleaner	منظف تمهيدي
Bio Diesel	الديزل الحيوي	Primary /Secondary	ابتدائي/ثانوي
Blower	نافخ هواء	Recirculation	إعادة تدوير
Cab /Fender mounted	مركب في الكابينة/الرفارف	Regulated Valve	صمام منظم
Cartridge	كارتريدج	Return Pipe	مجرى الإعادة
Charge Pump	مضخة شحن	Roof with Low Profile/High Profile	سقف بمواصفات منخفضة/مرتفعة
Control system	نظام التحكم	Safety	السلامة
Delivery Pipe	أنبوب التسليم	Self Cleaning	تنظيف ذاتي
Diesel particulate	جسيمات الديزل	Sensor	مستشعر
Fan	مروحة	Separator Fuel/Water	فاصل بين الوقود والمياه
Fine dust	غبار ناعم	Severe duty	الخدمة الشاقة
Foam	رغوة	Standard	القياسية
Front Axle	المحور الأمامي	Steering direction servocontrol	توجيه المقود بالتحكم من السيرفو
Fuel Sedimenting Device	أداة ترسيب الوقود	Tank	خزان
Fuel system with one / two filter	نظام الوقود بفلتر واحد/اثنين	Tank strainer	مصفاة الخزان
Gearbox	علبة التروس	Transmission	نقل السرعة
Heat exchanger	مبادل حراري	Vehicles made in UK / Austria	العربات المصنوعة في المملكة المتحدة/النمسا
Heater	سخان	With CAB	بالكابينة
High/ low pressure system	نظام الضغط المرتفع/المنخفض	With dust ejector	بقاذف غبار
Hydraulic Pump	مضخة هيدروليكية	Without CAB	بدون كابينة

NEW HOLLAND
AGRICULTURE

20€

Published by CNH Parts & Service EMEA. Every effort has been made to ensure the information contained in this catalogue is correct at the time of print. Drawings and photos are not contractual.

Safety never hurts! Always read the Operator's Manual before working with any equipment. Inspect equipment before using it, and be sure it is operating properly. Follow the product safety signs, and use any safety features provided.

This literature has been published for worldwide circulation. The standard and optional equipment and the availability of individual models may vary from one country to the next.

CNH Parts & Service Europe reserves the right to undertake modifications without prior notice to the design and technical equipment at all times without this resulting in any obligation whatsoever to make such modifications to units already sold. Whilst every effort is made to ensure that the specifications, descriptions and illustrations in this brochure are correct at the time of going to press, these are also subject to change without prior notice. Illustrations may show optional equipment or may not show all standard equipment.

NEW HOLLAND AGRICULTURE

YOUR SUCCESS - OUR SPECIALTY

CNH INDUSTRIAL | PARTS & SERVICE